INSTRUCTIONS

WVFM 10-16

003R9555

HFC, HCFC, CFC

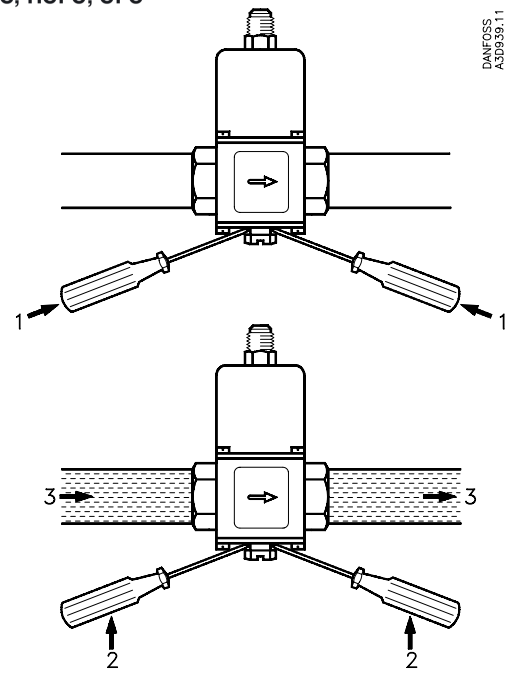

003R9555

Capillary tube

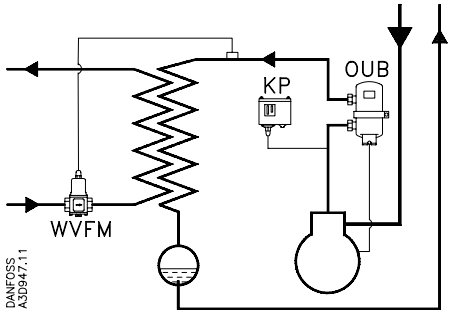

© Danfoss A/S

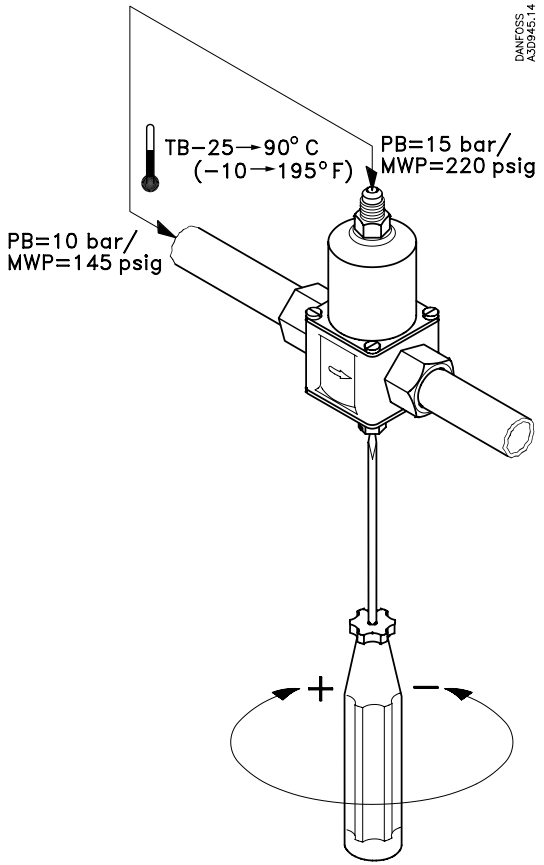

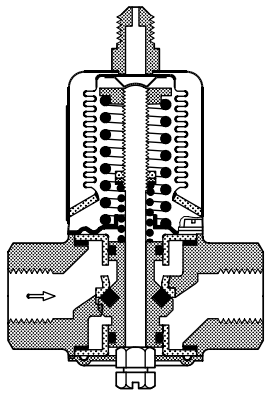

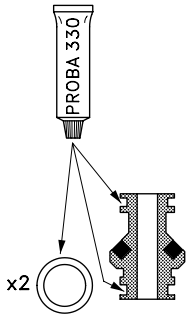

Repair kit:
See Spare Parts Catalogue

© Danfoss A/S (IC-MC,mr) 12-2002