Data sheet

Intrinsically safe pressure transmitters for hazardous environments, type MBS 4201, MBS 4251, MBS 4701 and MBS 4751

- Designed for use in severe and potentially explosive environments
- II 1G EEx ia IIC T4 - T6 in compliance with ATEX 100a.
  Applicable in potentially explosive atmosphere: Zone 0, Zone 1, Zone 2 (gases and vapour)
- Available with integrated pulse-snubber for protection against cavitation, liquid hammering and pressure peaks.
  Type MBS 4251 and MBS 4751.
- MBS 4701 and MBS 4751 with zero point and span adjustment.
- Enclosure and wetted parts of AISI 316L
- IP degree of protection: IP 65, IP 67, IP 69K
- Temperature compensated, linearized and laser pre-adjusted

Dimensions (See electrical connections on page 3)

Non adjustable versions
Type: MBS 4201, MBS 4251

Adjustable versions
Type: MBS 4701, MBS 4751

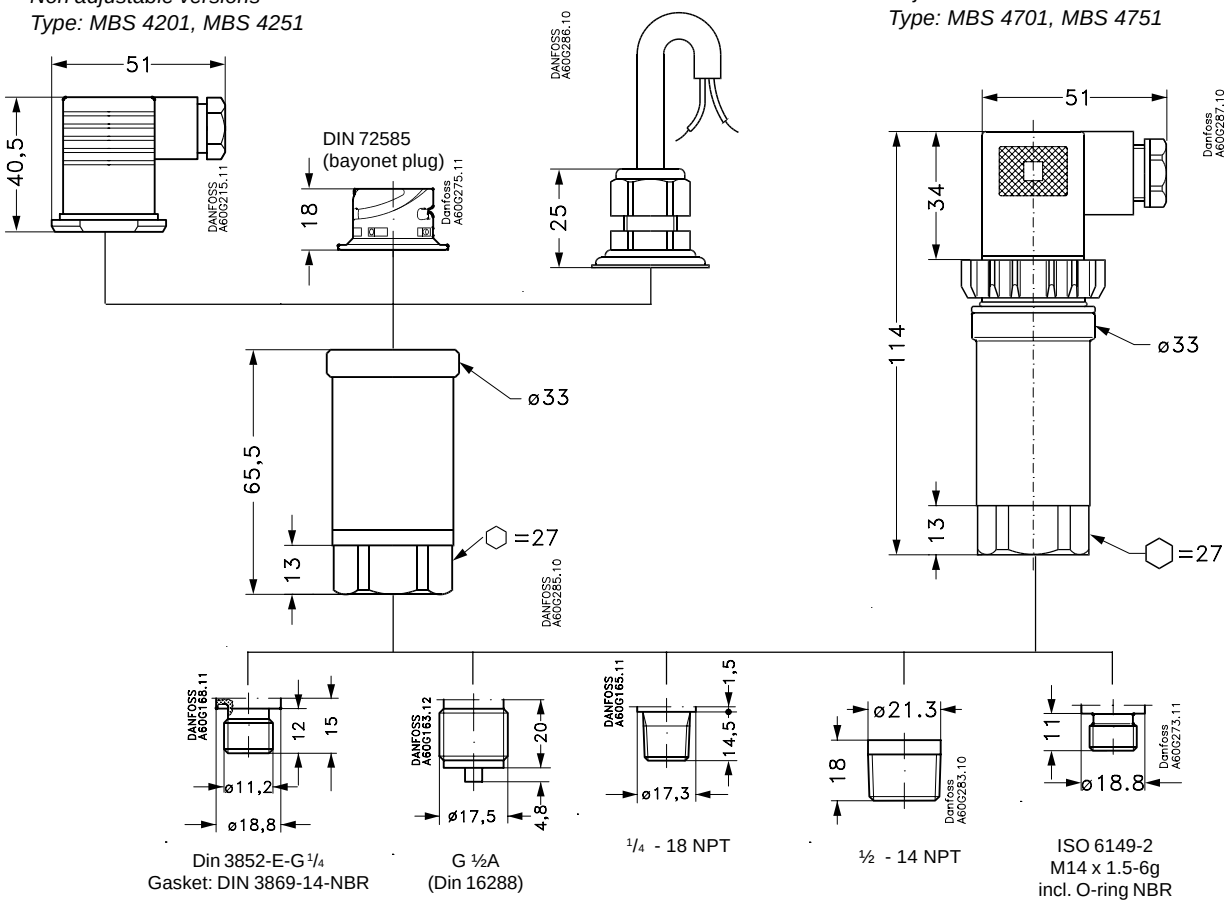

Technical data

Main specifications

Pressure connections	According to page 1
Measuring ranges [bar]	0-1, 0-1.6, 0-2.5, 0-4, 0-6, 0-10, 0-16, 0-25, 0-40 0-60 0-100, 0-160, 0-250, 0-400, 0-600
Output signals	4 - 20 mA
Electrical connections	According to page 3

Performance (IEC 770)

MBS Type		**Standard version**		**With zero point and span adjustment**	
		MBS 4201	**MBS 4251**	**MBS 4701**	**MBS 4751**
		—	with pulse-snubber	—	with pulse-snubber
Accuracy		± 1% FS	± 1 % FS	± 0.5 % FS	± 0.5 FS
Non-linearity (best fit straight line)		≤ ±0.2%			
Hysteresis and repeatability		≤ ±0.1% FS			
Thermal error band (compensated temp.range)		≤ ±1% FS			
Response time	Liquids with viscosity < 100 cSt	< 4 ms	< 4 ms	< 4 ms	< 4 ms
	Air and gases	< 4 ms	< 100 ms	< 4 ms	< 100 ms
Overload pressure (static)		Min. 6xFS - Max. 1500 bar			
Burst pressure		Min 6 x FS - Max. 2000 bar			
Durability, P: 10-90% FS		>10×10^6 cycles			
Zero point adjustment	0-1 to 0-10 bar measuring range	—	—	–5 to 20% FS	
	0-16 to 0-40 bar measuring range	—	—	–5 to 10% FS	
	0-60 to 0-600 measuring range	—	—	–2.5 to 5% FS	
Span adjustment	0-1 to 0-600 measuring range	—	—	–5 to 5% FS	

Electrical specifications

Nom. output signal (short-circuit protected)	4-20 mA
Supply voltage (polarity protected) - U_{supply}	10 to 28 V dc
Voltage dependency	< 0.05 % FS / 10 V
Current limitation	30-35 mA
Load [R_L] (load connected to 0V)	$R_L \leq (U_{supply} - 10V) / 0.02$

Environmental conditions

Medium temperature range				See page 3
Ambient temperature range (depending on electrical connection)				See page 3
Compensated temperature range				0 to +100°C
Transport temperature range			Plug version/ cable version	–50 to +100°C/ –30 to +80°C
EMC - Emission				EN 50081-1
EMC - Immunity	Electrostatic discharge		Air mode 8 kV Contact mode 4 kV	EN 50082-2 (IEC 801-2) EN 50082-2 (IEC 801-2)
	RF	field	10 V/m, 26 MHz - 1 GHz	EN 50082-2 (IEC 801-3)
		conducted	10 V_{rms},150 kHz - 30 MHz	EN 50082-2 (IEC 801-6)[1)]
	Transient	burst	4 kV (CM), Clamp	EN 50082-2 (IEC 801-4)
		surge	1 kV (CM,DM), Rg = 42 Ω	EN 50082-2 (IEC 801-5)
Insulation resistance				> 100 MΩ at 100 V dc
Vibration stability	Sinusoidal		20 g, 25 Hz - 2 kHz	IEC 68-2-6
	Random		7.5 g_{rms}, 5 Hz - 1 kHz	IEC 68-2-34, IEC 68-2-36
Shock resistance	Shock		500 g / 1 ms	IEC 68-2-27
	Free fall			IEC 68-2-32
Enclosure (depending on electrical connection)				see page 3

[1)] In the frequency range of 150 kHz - 3 MHz the error is > 1 % FS

Mechanical characteristics

Materials	Wetted parts	DIN 17440-1.4404 (AISI 316 L)
	Enclosure	DIN 17440-1.4404 (AISI 316 L)
Weight (depending on pressure connection and electrical connection)		0.2-0.3 kg

© Danfoss A/S 02-2001

MBS 4251 and MBS 4751 with pulse-snubber

MBS 4251 and MBS 4751 with integrated pulse-snubber is specially suited for hydraulic applications where cavitation, liquid hammer or pressure peaks may occur – influences that often cause a short but extreme excess of the measuring range of the transmitter. The integrated pulse-snubber is in principle designed as a nozzle mounted in the passage between the measured medium and the pressure sensitive element of the transmitter.

Application
Cavitation, liquid hammer and pressure peaks may occur in hydraulic systems with changes in flow velocity, e.g. fast closing of a valve or pump starts and stops.
The problem may occur on the inlet and outlet side, even at rather low operating pressures.

Media condition
Clogging of the nozzle may occur in liquids containing particles. Mounting the transmitter in an upright position minimizes the risk of clogging, because the flow in the nozzle is restricted to the start-up period when the dead volume behind the nozzle fills, and furthermore because the nozzle orifice is relatively big (0.3 mm). The media viscosity has only little effect on the response time. Even at a viscosities up to 100 cSt, the response time will not exceed 4 ms.

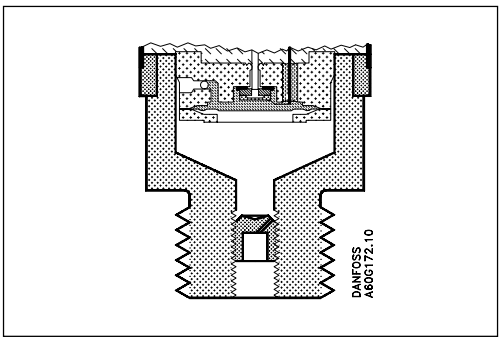

Electrical connections

	DIN 43650, Pg 9	DIN 72585-A1-3.2-Sn	Cable versions
	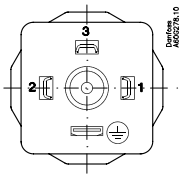	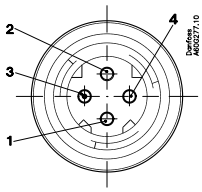	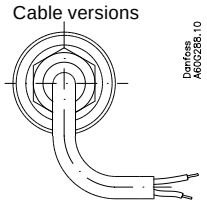
Materials of electrical connection	Glass filled Polyamid, PA 6.6	Glass filled Polyester, PBT	PVC cable
Protection	IP 65	IP 67 / IP 69K	IP 67
Ex-certification - Conformity specifications			
Ambient temperature			
Eex ia IIC T4	–40 to 100 °C	–40 to 100 °C	–30 to 80 °C
Eex ia IIC T5	–40 to 75 °C	–40 to 75 °C	–30 to 75 °C
Eex ia IIC T6	–40 to 50 °C	–40 to 50 °C	–30 to 50 °C
Medium temperature			
Eex ia IIC T4	–40 to 125 °C	–40 to 125 °C	–40 to 125 °C
Eex ia IIC T5	–40 to 95 °C	–40 to 95 °C	–40 to 95 °C
Eex ia IIC T6	–40 to 50 °C	–40 to 50 °C	–40 to 50 °C
Power supply Ui	28 V dc	28 V dc	28 V dc
Short circuit rating Ii	100 mA	100 mA	100 mA
Power limitation Pi	0.7 W	0.7 W	0.7 W
Internal capacity Ci	≤ 40 nF	≤ 40 nF	≤ 40 nF + 0.2 nF/m cable
Internal inductivity Li	≤ 0.1 mH	≤ 0.1 mH	≤ 0.1 mH + 0.8 µH/m cable
Electrical connection			
Standard configuration	Pin 1 + Supply Pin 2 – Supply Pin 3 Not used Earth Connected to MBS housing	Pin 1: + Supply Pin 2 – Supply Pin 3 Ventilation Pin 4 Not used	Black 1: + Supply Black 2: – Supply Screen Not connected to MBS housing

Ordering standard versions

with G½A (DIN 16288) pressure connection and DIN 43650 plug

Measuring range P_e (Gauge/relative)	MBS 4701	
	Type no.	**Code no.**
0-1 bar	MBS 4701-1011-1AB08	**060G4303**
0-1.6 bar	MBS 4701-1211-1AB08	**060G4300**
0-2.5 bar	MBS 4701-1411-1AB08	**060G4304**
0-4 bar	MBS 4701-1611-1AB08	**060G4305**
0-6 bar	MBS 4701-1811-1AB08	**060G4306**
0-10 bar	MBS 4701-2011-1AB08	**060G4307**
0-16 bar	MBS 4701-2211-1AB08	**060G4301**
0-25 bar	MBS 4701-2411-1AB08	**060G4308**
0-40 bar	MBS 4701-2611-1AB08	**060G4309**
0-60 bar	MBS 4701-2811-1AB08	**060G4302**
0-100 bar	MBS 4701-3011-1AB08	**060G4310**

Measuring range P_e (Gauge/relative)	**MBS 4751** (with pulse-snubber)	
	Type no.	**Code no.**
0-160 bar	MBS 4751-3211-1AB08	**060G4311**
0-250 bar	MBS 4751-3411-1AB08	**060G4312**
0-400 bar	MBS 4751-3611-1AB08	**060G4313**
0-600 bar	MBS 4751-3811-1AB08	**060G4314**

© Danfoss A/S 02-2001

Ordering special versions

MBS 4201-
MBS 4251-
MBS 4701-
MBS 4751-

1 -

Measuring range

0 - 1 bar	1 0
0 - 1.6 bar	1 2
0 - 2.5 bar	1 4
0 - 4 bar	1 6
0 - 6 bar	1 8
0 - 10 bar	2 0
0 - 16 bar	2 2
0 - 25 bar	2 4
0 - 40 bar	2 6
0 - 60 bar	2 8
0 - 100 bar	3 0
0 - 160 bar	3 2
0 - 250 bar	3 4
0 - 400 bar	3 6
0 - 600 bar	3 8

Pressure reference

Gauge (relative)	1
Absolute	2

Output signal

4-20 mA	1

Pressure connection

G B 0 4	DIN 3852-E-**G¹/₄**, gasket : DIN 3869-14-NBR
A B 0 8	**G½ A** (DIN 16288)
A C 0 4	**¼** - 18 NPT
A C 0 8	**½** - 14 NPT
F A 0 8	ISO 6149-2, **M14x1.5**-6g, O-ring 11.3x2.2, NBR

Electrical connection

1	Plug, DIN 43650, Pg 9	
3	Screened cable, 2 m	(MBS 4201/4251)
7	Plug, DIN 72585-A1-3.2-Sn, male[1)]	(MBS 4201/4251)

[1)] Excl. female plug (see accessories)

Accessories

Safety barriers (*further information is* available *in the data sheet (DKACT.PD.P20.Y1.02)*	**Code no.**
Stahl - 9001/01-280-100-10 safety barrier (grounded circuit) for DIN-rail mounting	**060G4325**
Stahl - 9002/13-280-093-00 safety barrier (floating circuit) for DIN-rail mounting	**060G4326**
Stahl - 9001/51-280-091-14 power supply safety barrier for DIN-rail mounting	**060G4327**
Stahl - 160 mA spare back-up fuse with holder for Stahl safety barrier (5 pcs.)	**060G4329**
Galvanic isolator (further information is available in the data sheet (*DKACT.PD.P20.Y1.02*)	**Code no.**
Stahl - 9303/11-22-11 I.S Isolator (transmitter supply unit) for DIN-rail mounting	**060G4328**

Female DIN 72585 plug (bayonet) with cable	**Code no.**
with 2 m blue PVC cable (C ≤ 0.2 nF/m, L ≤ 0.8 μH/m)	**060G3390**
with 5 m blue PVC cable (C ≤ 0.2 nF/m, L ≤ 0.8 μH/m)	**060G3391**
Adaptor with integrated pulse-snubber	**Code no.**
G½ female to G½A (DIN 16288) male adaptor	**060G0252**
Adaptors	**Code no.**
G½ female to G¹/₄A (DIN 16288) male	**060G1021**
G½ female to G³/₈A (DIN 16288) male	**060G1023**
G½ female to ¹/₄ in. flare (⁷/₁₆ - 20 UNF) male	**060G1024**
G½ female to ⁹/₁₆ - 18 UNF - 2A male	**060G1026**
G½ female to ¹/₄ - 18 NPT male	**060G1027**
G½ female to ½ - 14 NPT male	**060G4323**
G½ female to ISO 6149-2, M14x1.5-6 g male	**060G4324**

Danfoss can accept no responsibility for possible errors in catalogues, brochures and other printed material. Danfoss reserves the right to alter its products without notice. This also applies to products already on order provided that such alterations can be made without subsequential changes being necessary in specifications already agreed.
All trademarks in this material are property of the respective companies. Danfoss and the Danfoss logotype are trademarks of Danfoss A/S. All rights reserved.

DK-6430 Nordborg
Denmark