Data sheet

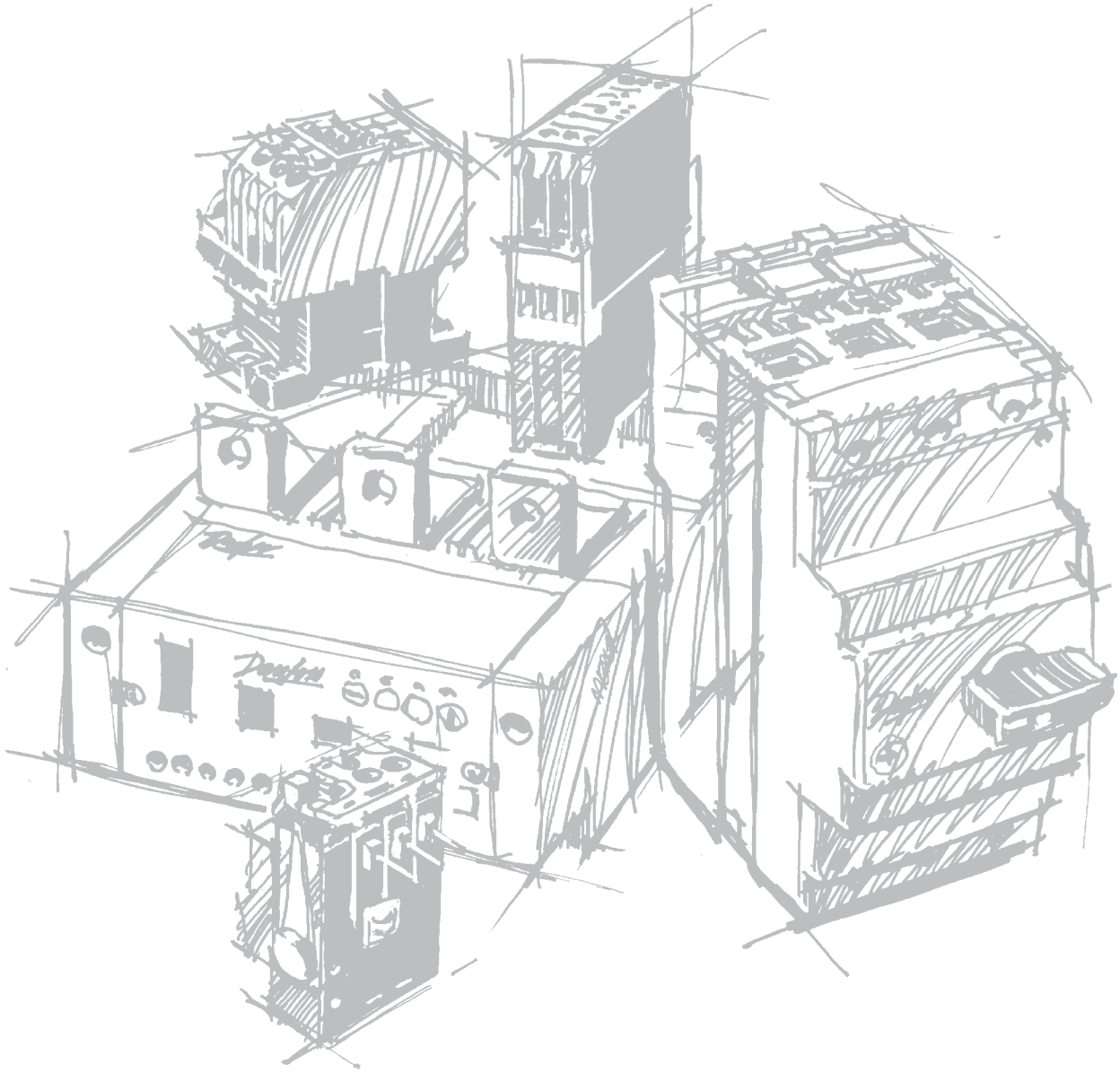

# CI-TI ™ Contactors and Motor Starters

## Starter assemblies CIM 6-30, CIMF 9-16 and SDU 12-25

## Introduction

*Motor starters*
To fully exploit the flexibility of the range where stock levels and combination possibilities are concerned, motor starters are not normally supplied as complete units.
Instead, the individual components making up a motor starter can be ordered and supplied separately. However, the contactor can be supplied enclosed, with stop/reset or start-stop/reset buttons up to 30 A, under type designation CIM followed by the code number. The thermal overload relay must be ordered separately.
The full load currents given in the table are indicative values and should only be used as such when sizing contactors. When determining contactor size, account should be taken of the full load current value stamped on the motor rating plate, and the ratio between start and full load currents. This ratio depends, among other things, on the number of motor poles and is specified by the motor manufacturer. The ratio varies greatly from motor to motor and between makes of motors; the start current can be as much as 12-15 times the full load current.
For this reason the recommendation is to always refer to the specification from the motor manufacturer when selecting contactor size because contactors made to IEC 947-4 are designed to switch six times the full load current.

*Example*
4 kW motor: 3 x 380 V
Start current: 10 x $I_e$
Full load current: $I_e$ = 9 A
Start current: 10 x 9 = 90 A

*Selection of contactor*

CI 9: Start current 6 x 9 = 54 A: too small

CI 12: Start current 6 x 12 = 72 A: too small

CI 15 or CI 16: Start current 6 x 16 = 96 A: OK

*Star-delta starters*
Star-delta starters type SDU can start/stop induction motors up to 22 kW or up to 43 full load current.

The star-delta starters are supplied as complete units without thermal overload relays.

The thermal overload relays must be ordered separately in accordance with the actual full load current of the motor. The enclosure must be ordered separately.


® Danfoss A/S 08-2002

## Ordering

**Not stocked in Denmark. Available on the UK-market only.**

**CIM 6 - 30**

*Motor starters CIM 6 - 30*

| Max. motor output | | | Full load current (FLC) A | Push buttons | **Code no.** [1] | Type |
|---|---|---|---|---|---|---|
| 1 × 220-240 V kW | 3 × 220-240 V kW | 3 × 380-690 V kW | | | | |
| 1.1 | 2.2 | 4.0 | 9 | Stop/reset | **047B4021** | CIM 9 |
| 1.1 | 2.2 | 4.0 | 9 | Start-stop/reset | **047B4022** | CIM 9 |
| 1.5 | 3.0 | 5.5 | 12 | Stop/reset | **047B4031** | CIM 12 |
| 1.5 | 3.0 | 5.5 | 12 | Start-stop/reset | **047B4032** | CIM 12 |
| 2.2 | 4.0 | 7.5 | 16 | Stop/reset | **047B4041** | CIM 16 |
| 2.2 | 4.0 | 7.5 | 16 | Start-stop/reset | **047B4042** | CIM 16 |
| 4 | 5.5 | 11 | 25 | Stop/reset | **047B4051** | CIM 25 |
| 4 | 5.5 | 11 | 25 | Start-stop/reset | **047B4052** | CIM 25 |

[1]) Coil voltage/frequency or Suffix no. (see tables below) must be added to the Danfoss code no.
[2]) Max. 500 V

**Enclosure CIMF 9 - 16**

*Motor starters CIMF 9 - 16 (Flushmount)*

| Max. motor output | | | Full load current (FLC) A | Push buttons | **Code no.** [1] | Type |
|---|---|---|---|---|---|---|
| 1 × 220-240 V kW | 3 × 220-240 V kW | 3 × 380-690 V kW | | | | |
| 1.1 | 2.2 | 4.0 | 9 | Start-stop/reset | **047B2025** | CIMF 9 |
| 1.5 | 3.0 | 5.5 | 12 | Start-stop/reset | **047B2035** | CIMF 12 |
| 2.2 | 4.0 | 7.5 | 16 | Start-stop/reset | **047B2045** | CIMF 16 |

[1]) Coil voltage/frequency or appendix no. (see tables below) must be added to the Danfoss code no.

*Note! Thermal overload relay must be ordered separately.*

**TI 16C, 25C**

*Thermal overload relays*

| Range Motor starter A | **Code no.** | Type |
|---|---|---|
| 0.13 - 0.20 | **047H0200** | TI 16C |
| 0.19 - 0.29 | **047H0201** | |
| 0.27 - 0.42 | **047H0202** | |
| 0.4 - 0.62 | **047H0203** | |
| 0.6 - 0.92 | **047H0204** | |
| 0.85 - 1.3 | **047H0205** | |
| 1.2 - 1.9 | **047H0206** | |
| 1.8 - 2.8 | **047H0207** | |
| 2.7 - 4.2 | **047H0208** | |
| 4.0 - 6.2 | **047H0209** | |
| 6.0 - 9.2 | **047H0210** | |
| 8.0 - 12 | **047H0211** | |
| 11 - 16 | **047H0212** | |
| 15 - 20 | **047H0213** | TI 25C |
| 19 - 25 | **047H0214** | |

*a.c. coil voltages for CIM 6-30 and CIMF 9-16*

| Coil voltage | Suffix no. |
|---|---|
| 220 - 230 V, 50 Hz | 31 |
| 240 V, 50 Hz / 288 V, 60 Hz | 33 |
| 380-400 V, 50 Hz / 440 V, 60 Hz | 37 |
| 415 V, 50 Hz / 500 V, 60 Hz | 38 |


® Danfoss A/S 08-2002

**SDU 12-25 insert for enclosure F1**

*Automatic star-delta starter inserts SDU12, SDU 16, SDU 25*

| Max. motor output 3x220-230 V kW | Max. motor output 3x380-690 V kW | $I_{max}$ A | For enclosure type | Code no. | Type [1]) |
|---|---|---|---|---|---|
| 5.5 | 10 | 21 | F1 | **047B1300** | SDU 12 |
| 7.5 | 13 | 27 | | **047B1301** | SDU 16 |
| 11 | 22 | 43 | | **047B1302** | SDU 25 |
| 5.5 | 10 | 21 | F2 | **047B1303** | SDU 12 |
| 7.5 | 13 | 27 | | **047B1304** | SDU 16 |
| 11 | 22 | 43 | | **047B1305** | SDU 25 |
| 5.5 | 10 | 21 | F3 | **047B1306** | SDU 12 |
| 7.5 | 13 | 27 | | **047B1307** | SDU 16 |
| 11 | 22 | 43 | | **047B1308** | SDU 25 |
| 5.5 | 10 | 21 | Panel mounting | **047B1314** | SDU 12 |
| 7.5 | 13 | 27 | | **047B1315** | SDU 16 |
| 11 | 22 | 43 | | **047B1316** | SDU 25 |

[1]) Note! Thermal overload relay must be ordered separately, see below

*Coil voltages for star-delta starters*

| Coil voltage | Appendix no. |
|---|---|
| 220 - 230 V, 50 Hz | 31 |
| 240 V, 50 Hz / 288 V, 60 Hz | 33 |
| 380-400 V, 50 Hz / 440 V, 60 Hz | 37 |
| 415 V, 50 Hz / 500 V, 60 Hz | 38 |

*Correct ordering*

Example: SDU 12 insert for plastic enclosure, coil voltage 220-230 V/50 Hz
Select one of the following two forms of ordering:

1. Danfoss code no. + Suffix no.:
   047B1300.31
   or
2. Danfoss code no. + coil voltage/frequency:
   047B1300, 220-230 V/50 Hz

**TI 16C, 25C**

*Thermal overload relays*

| Fit to | Range Y/D starter A | Code no. | Type |
|---|---|---|---|
| | 3.2 - 4.8 | **047H0207** | TI 16C |
| SDU 12 | 4.7 - 7.3 | **047H0208** | |
| | 6.9 - 10.7 | **047H0209** | |
| SDU 16 | 10 - 16 | **047H0210** | |
| | 13 - 20.8 | **047H0211** | |
| SDU 25 | 19 - 27 | **047H0212** | |
| | 26 - 35 | **047H0213** | TI 25C |
| | 33 - 43 | **047H0214** | |


® Danfoss A/S 08-2002

## Introduction

F1

F2

F3

Enclosures for star-delta starters SDU 12 - 25 and SDI 32 - 45

Star-delta starters type SDU 12, 16 and 25 up to 22 kW fit in plastic enclosures F1, F2 and F3.

The enclosures are equipped with different sizes of knockouts for Pg and metric cable glands. Degree of protection is IP 55 to IEC 529.

*Plastic enclosures for star-delta starters type SDU 12, SDU 16, SDU 25 (IP 55)*

| Y/D-starter insert | Pushbuttons | Knockouts | **Code no.** | Type |
|---|---|---|---|---|
| SDU 12, 047B1300 | Start-Stop/reset | 8 M 20, 6 M 25 | **047B1310** | F1 |
| SDU 16, 047B1301 | | | | |
| SDU 25, 047B1302 | | | | |
| SDU 12, 047B1303 | Start-Stop/reset | 8 M 20, 6 M 25 | **047B1311** | F2 |
| SDU 16, 047B1304 | | | | |
| SDU 25, 047B1305 | | | | |
| SDU 12, 047B1306 | Start-Stop/reset and isolator | 8 M 20, 6 M 25 | **047B1312** | F3 |
| SDU 16, 047B1307 | | | | |
| SDU 25, 047B1308 | | | | |


® Danfoss A/S 08-2002

**Not stocked in Denmark. Available on the UK-market only.**

*Motor starters CIMI (contactor in enclosure with pushbuttons and isolator)*

| Max. motor output 1 × 220-240 V kW | 3 × 220-240 V kW | 3 × 380-690 V kW | Full load current (FLC) A | Push buttons | **Code no.** | Type |
|---|---|---|---|---|---|---|
| 1.1 | 2.2 | 4.0 | 9 | Start-stop/reset | **099-4000** | CIMI 9 |
| 1.5 | 3.0 | 5.5 | 12 | Start-stop/reset | **099-4001** | CIMI 12 |
| 2.2 | 4.0 | 7.5 | 16 | Start-stop/reset | **099-4002** | CIMI 16 |
| 4.0 | 5.5 | 11 | 25 | Start-stop/reset | **099-4003** | CIMI 25 |

*Motor starters CIMR (reversing contactors in enclosure with pushbuttons)*

| Max. motor output 1 × 220-240 V kW | 3 × 220-240 V kW | 3 × 380-690 V kW | Full load current (FLC) A | Push buttons | **Code no.** | Type |
|---|---|---|---|---|---|---|
| 1.1 | 2.2 | 4.0 | 9 | For/rev-stop/reset | **099-4010** | CIMR 9 |
| 1.5 | 3.0 | 5.5 | 12 | For/rev-stop/reset | **099-4011** | CIMR 12 |
| 2.2 | 4.0 | 7.5 | 16 | For/rev-stop/reset | **099-4012** | CIMR 16 |
| 4.0 | 5.5 | 11 | 25 | For/rev-stop/reset | **099-4013** | CIMR 25 |

*Motor starters CIMRI (reversing contactors in enclosure with pushbuttons and isolator)*

| Max. motor output 1 × 220-240 V kW | 3 × 220-240 V kW | 3 × 380-690 V kW | Full load current (FLC) A | Push buttons | **Code no.** | Type |
|---|---|---|---|---|---|---|
| 1.1 | 2.2 | 4.0 | 9 | For/rev-stop/reset | **099-4020** | CIMRI 9 |
| 1.5 | 3.0 | 5.5 | 12 | For/rev-stop/reset | **099-4021** | CIMRI 12 |
| 2.2 | 4.0 | 7.5 | 16 | For/rev-stop/reset | **099-4022** | CIMRI 16 |
| 4.0 | 5.5 | 11 | 25 | For/rev-stop/reset | **099-4023** | CIMRI 25 |

*Note! Thermal overload relay must be ordered separately, see page 4*

*Correct ordering*
Example:
SDIM 32 insert in steel enclosure, coil voltage 240 V/50 Hz.
Select one of the following two forms of ordering:
1. Danfoss code no. + Suffix no.:
   099-4034.33
   or
2. Danfoss code no. + coil voltage/ frequency:
   099-4034, 240 V/50 Hz

*Note! Thermal overload relay must be ordered separately, see page 4 and 5*

*Coil voltages for star-delta starters*

| Coil voltage 50 Hz V | 60 Hz V | Appendix no. |
|---|---|---|
| 92 | 110 | 21 |
| 110 | 132 | 22 |
| 183 | 220 | 29 |
| 200 | 240 | 30 |
| 220-230 | 264 | 31 |
| 240 | 288 | 33 |
| 317 | 380 | 92 |
| 380-400 | 440 | 37 |
| 415 | 500 | 38 |

*Automatic star-delta starters SDI 32-50 on DIN rail*

| Max. motor output 3x220-240 V kW | 3x380-690 V kW | $I_{max}$ A | **Code no.** | Type |
|---|---|---|---|---|
| 15 | 30 | 56 | **099-4064** | SDI 32 |
| 22 | 37 | 78 | **099-4065** | SDI 45 |
| 25 | 45 | 85 | **099-4063** | SDI 50 |

*Automatic star-delta starters SDIM 32-45 in steel enclosures*

| Max. motor output 3x220-240 V kW | 3x380-690 V kW | $I_{max}$ A | **Code no.** | Type |
|---|---|---|---|---|
| 15 | 30 | 56 | **099-4034** | SDIM 32 |
| 22 | 37 | 78 | **099-4035** | SDIM 45 |

*Automatic star-delta starters with isolator. Plastic encl. SDIMI 12-25, Steel encl. SDIMI 32-105*

| Max. motor output 3x220-240 V kW | 3x380-690 V kW | $I_{max}$ A | **Code no.** | Type |
|---|---|---|---|---|
| 5.5 | 7.5 | 21 | **099-4041** | SDIMI 12 |
| 7.5 | 11 | 27 | **099-4042** | SDIMI 16 |
| 11 | 22 | 43 | **099-4043** | SDIMI 25 |
| 15 | 30 | 56 | **099-4044** | SDIMI 32 |
| 22 | 37 | 78 | **099-4045** | SDIMI 45 |
| 25 | 45 | 85 | **099-4051** | SDIMI 50 |
| 31.5 | 55 | 105 | **099-4049** | SDIMI 60 |
| 45 | 75 | 140 | **099-4050** | SDIMI 85 |
| 55 | 90 | 170 | **099-4048** | SDIMI 105 |


® Danfoss A/S 08-2002

## Wiring diagrams

*Star-delta starters*

*SDU 12, 16 and 25 for panel mouting*

Main current diagram

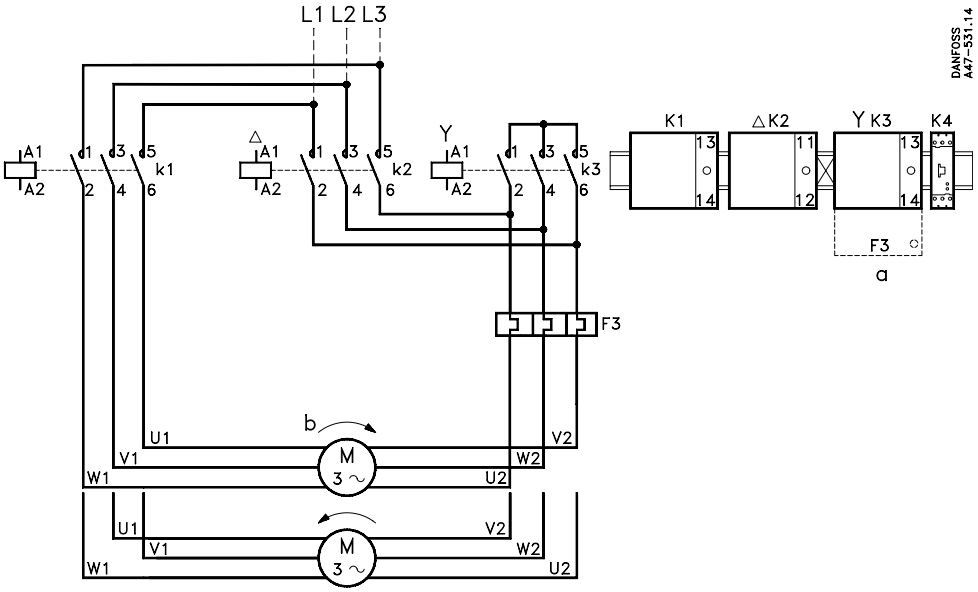


Key diagram

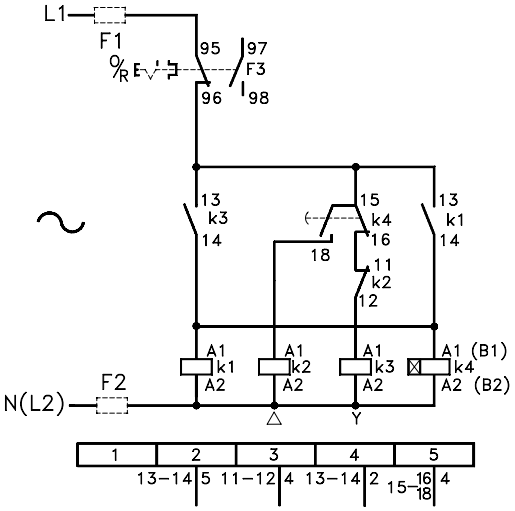


**a** Fit thermal overload relay close to K3 and set full load current (Y/D-)scale

**b** U1 = U | U2 = X
V1 = V | V2 = Y
W1 = W | W2 = Z


® Danfoss A/S 08-2002

## Wiring diagrams

*Star-delta starters*

*SDU 12, 16 and 25 for mouting in plastic enclosure type F1*

Main current diagram

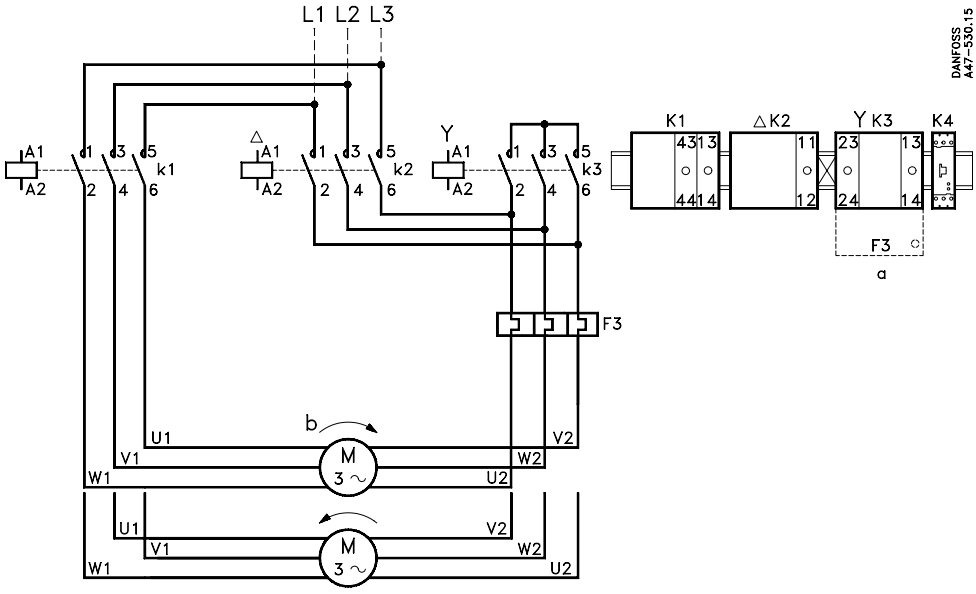


Key diagram

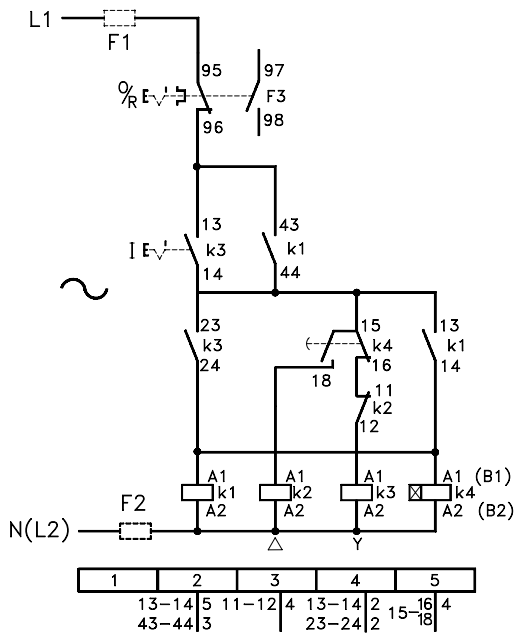


**a** Fit thermal overload relay close to K3 and set full load current (Y/D-)scale

**b** U1 = U | U2 = X
V1 = V | V2 = Y
W1 = W | W2 = Z


® Danfoss A/S 08-2002

## Wiring diagrams

*Star-delta starters*

*SDU 12, 16 and 25 for mouting in plastic enclosure type F2*

Main diagram

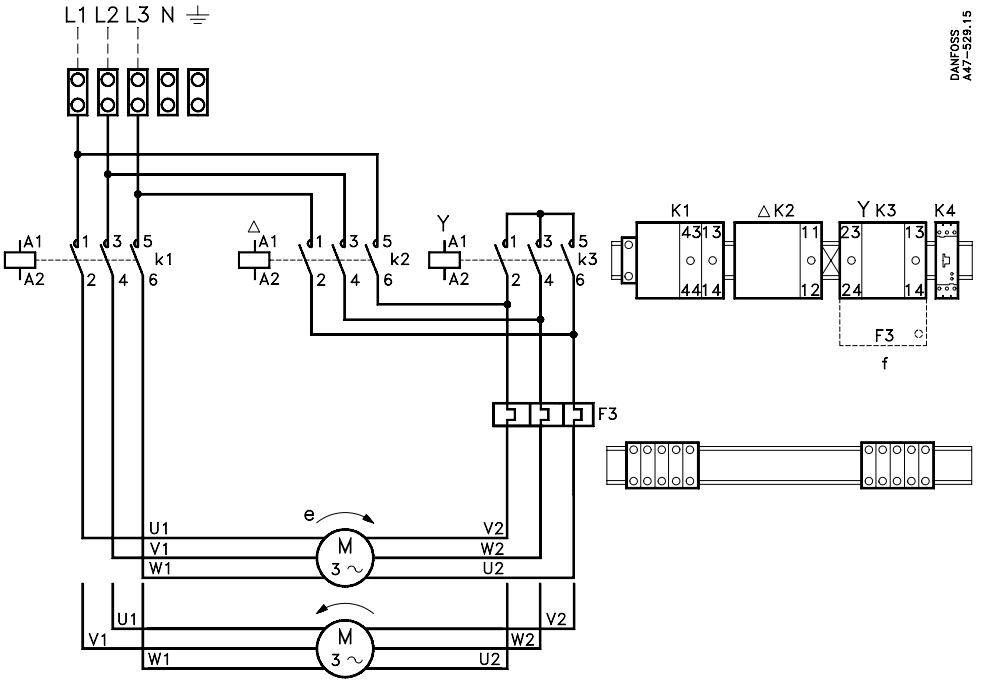


Key diagram

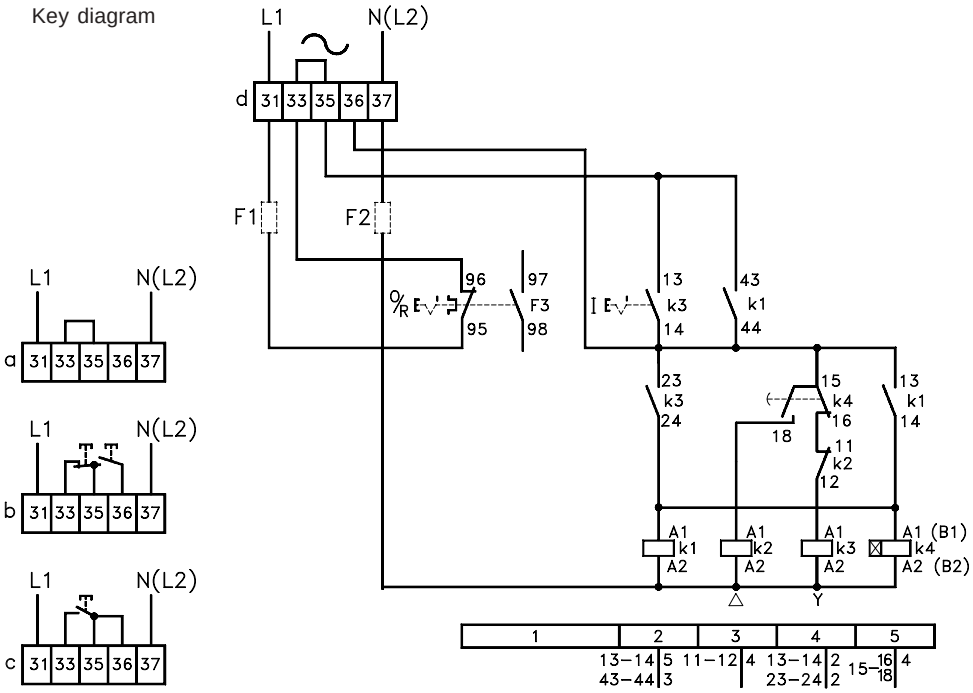


**a** Pushbutton control on enclosure.
**b** Control from remote pushbutton station.
**c** Control by thermostat, pressure switch, single pole switch or similar.
**d** Pilot voltage

**e** U1 = U | U2 = X
V1 = V | V2 = Y
W1 = W | W2 = Z

**f** Fit thermal overload relay close to K3 and set full load current (Y/D-scale).


® Danfoss A/S 08-2002

## Wiring diagrams

*Star-delta starters*

*SDU 12, 16 and 25 for mouting in plastic enclosure type F3*

Main diagram

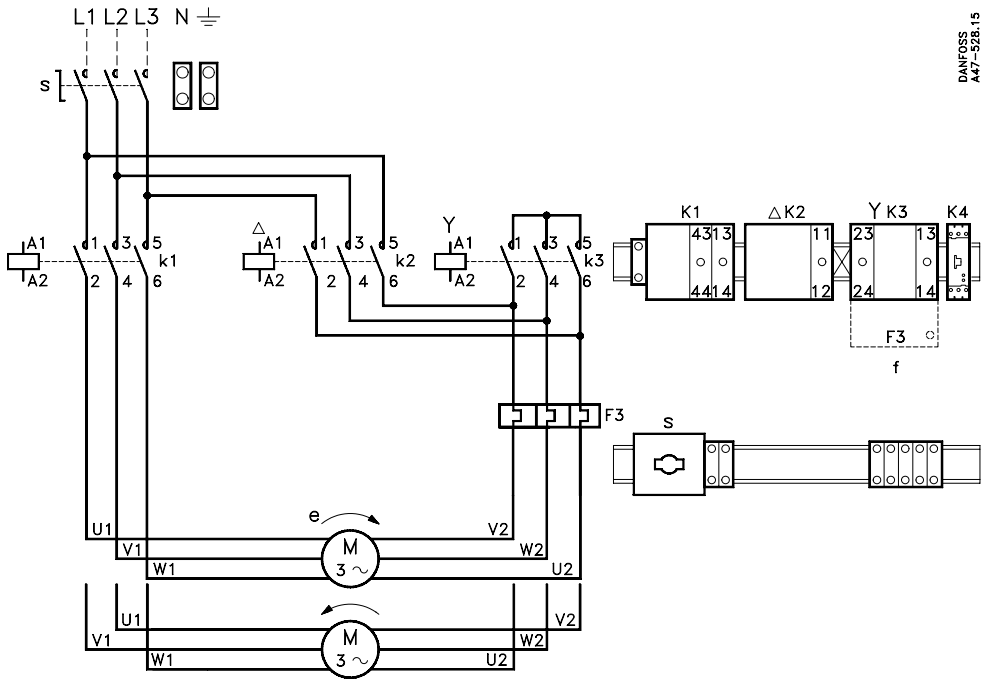


Key diagram

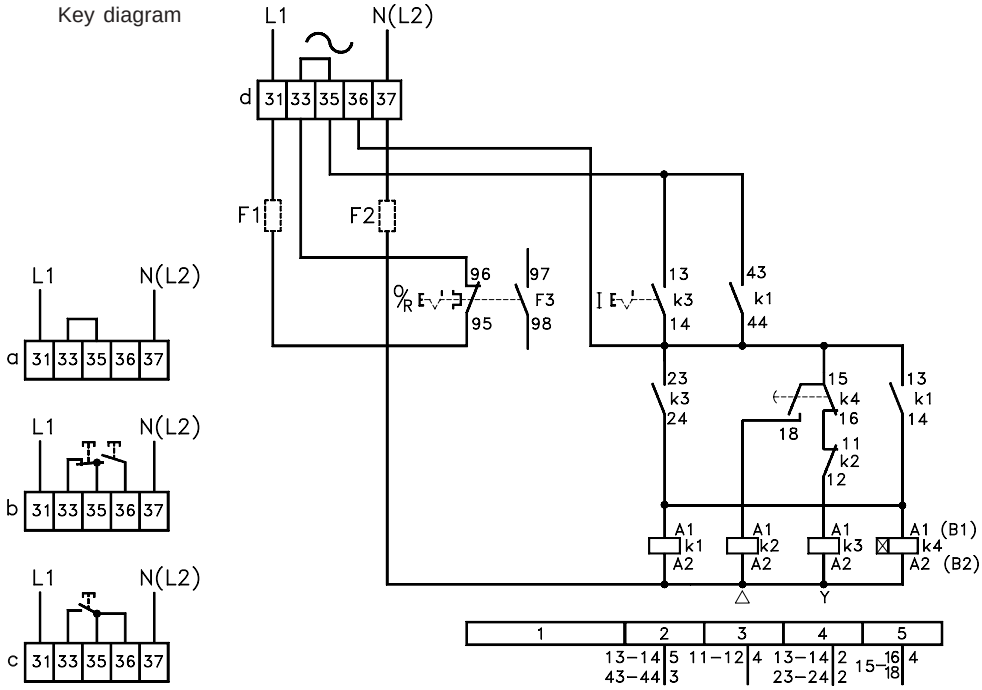


**a** Pushbutton control on enclosure.
**b** Control from remote pushbutton station.
**c** Control by thermostat, pressure switch, single pole switch or similar.
**d** Pilot voltage

**e** U1 = U | U2 = X
V1 = V | V2 = Y
W1 = W | W2 = Z

**f** Fit thermal overload relay close to K3 and set full load current (Y/D-scale).


® Danfoss A/S 08-2002

## Wiring diagrams

*Reversing starters*

Main diagram

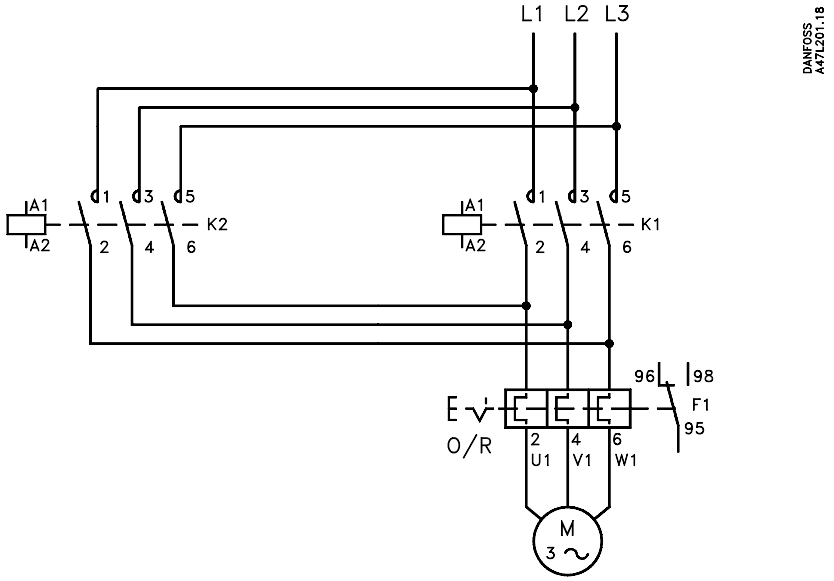


Key diagam

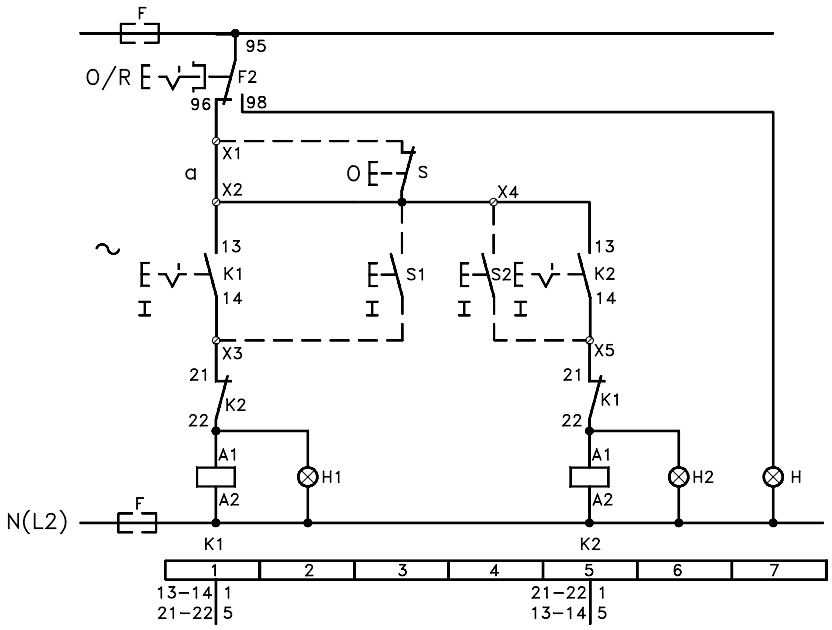


a Operation from external push button station. Wire between X1-X2 to be removed.

Used especially in systems where both directions of motor rotation are used, e.g. ventilating and handling systems.


® Danfoss A/S 08-2002

## Wiring diagrams

*Two speed starters*

*Two speed starter for motors with two separate windings.*

Main diagram

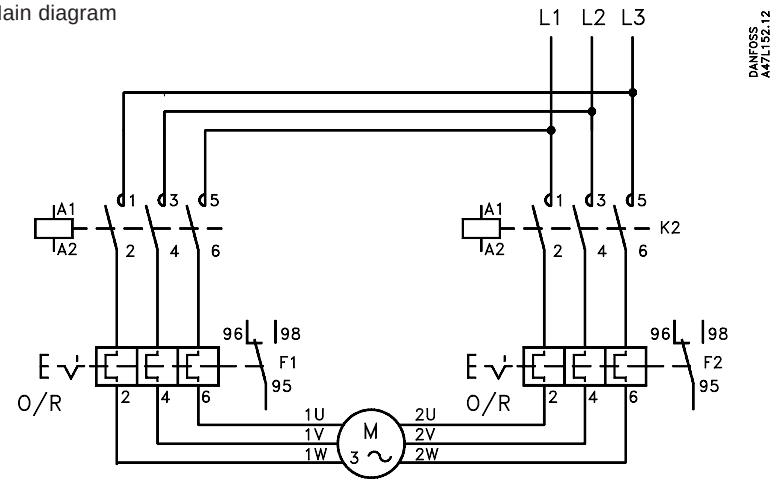


Key diagam

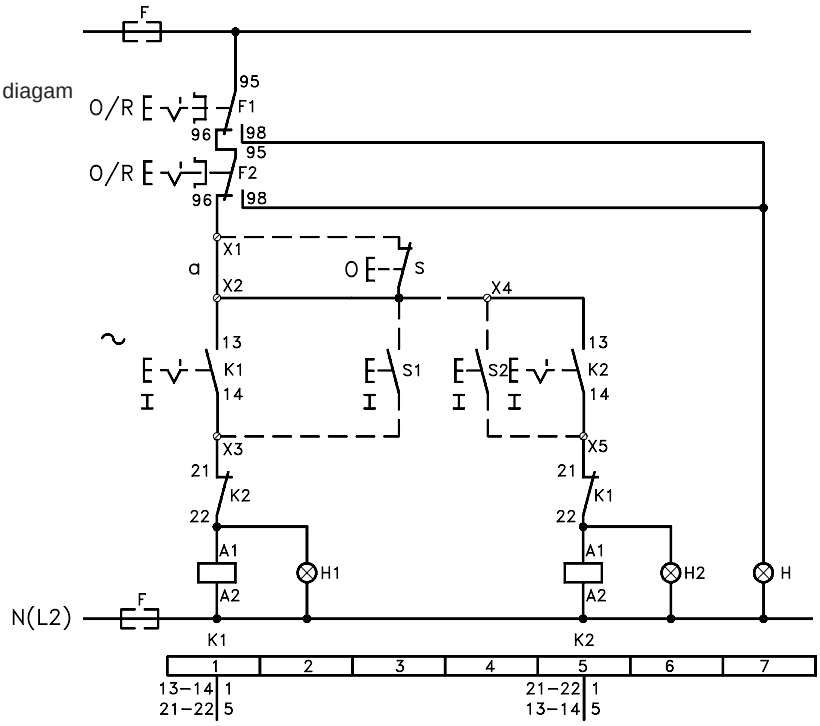


a Operation from external push button station. Wire between X1-X2 to be removed.

Used especially in systems where both directions of motor rotation are used, e.g. ventilating and handling systems.


® Danfoss A/S 08-2002

## Wiring diagrams

*Two speed starters*

*Two speed starter for motors with two tap windings (Dahlander coupling)*

Main diagram

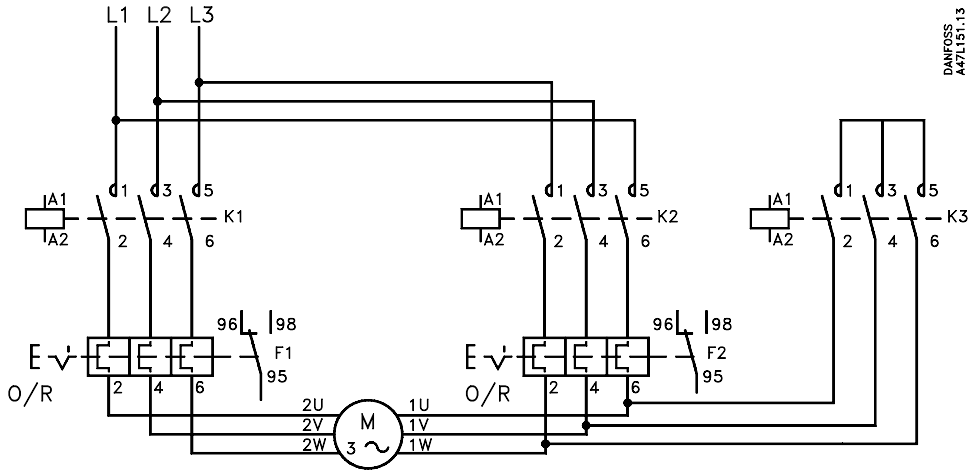


Key diagam

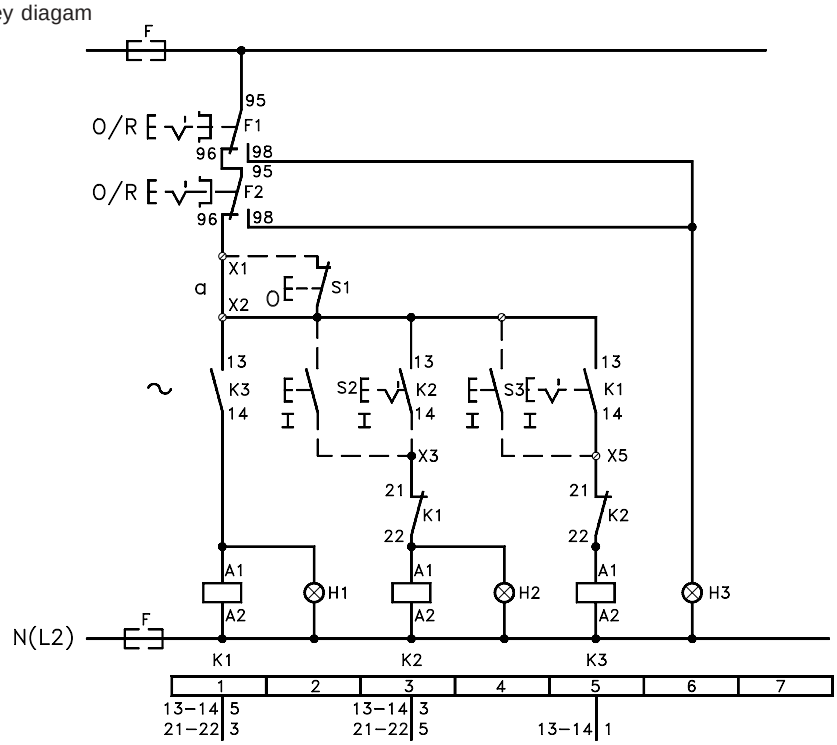


a Operation from external push button station. Wire between X1-X2 to be removed.
Low speed with K2 switched in.
High speed with K1 and K3 switched in.

Used especially in systems where both directions of motor rotation are used, e.g. ventilating and handling systems.


® Danfoss A/S 08-2002

## Wiring diagrams

*Motor starters*

*Remote operation from thermostat, pressure switch or similar*

Main current diagram Key diagram

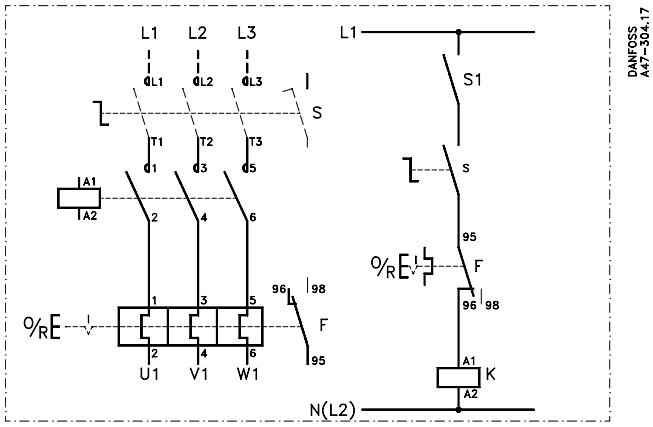


S: Lead isolator
S1: Pressure control, thermostat or 1-pole switch
F: Thermal overload relay
K: Contactor

*Motor starter in enclosure with stop/reset function*

*Pushbutton operation from motor starter*

Main current diagram Key diagram

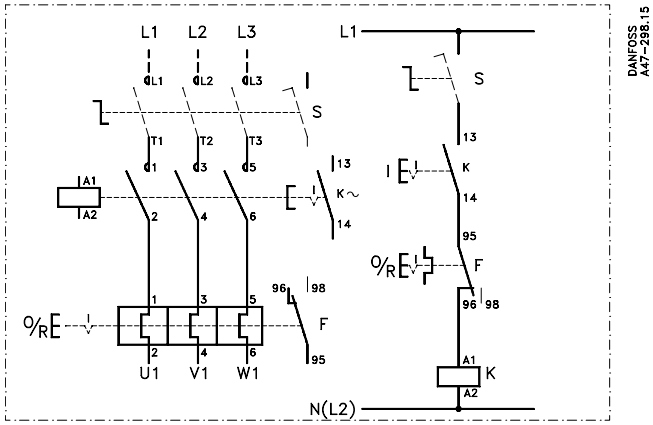


S: Lead isolator
F: Thermal overload relay
K: Contactor/Start contact

*Motor starter in enclosure with start-stop/reset function*


® Danfoss A/S 08-2002

## Wiring diagrams

*Motor starters*

*For single phase motors*

Main current diagram Key diagram

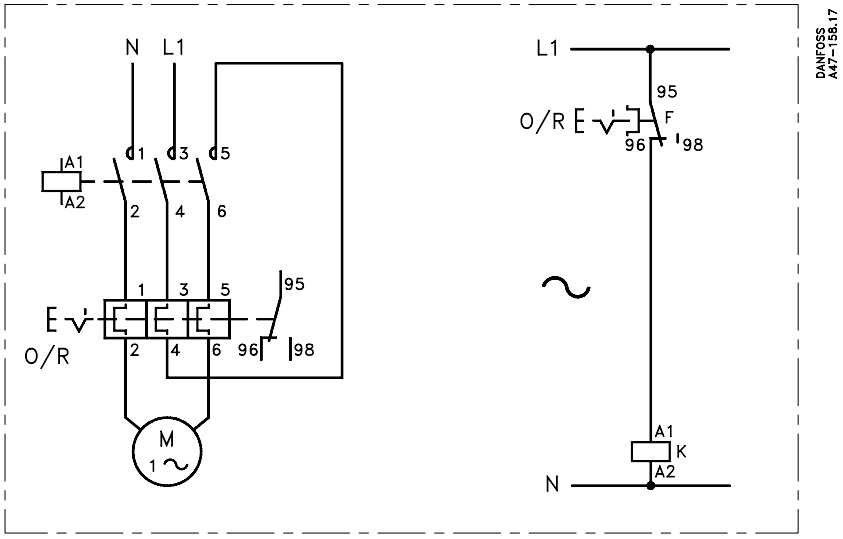


F: Thermal overload relay
K: Contactor

*Motor starter in enclosure with stop/reset function*

*For single phase motors*

Main current diagram Key diagram

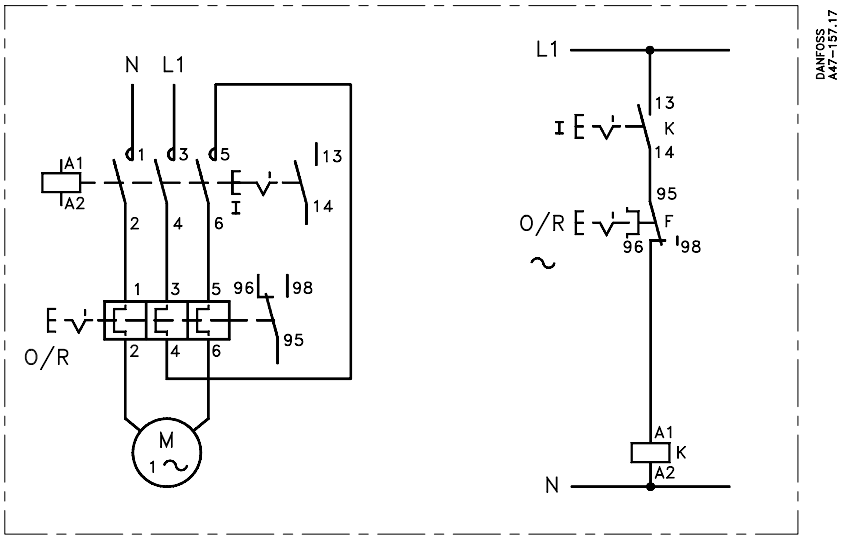


F: Thermal overload relay
K: Contactor/Start contact

*Motor starter in enclosure with start-stop/reset function*


® Danfoss A/S 08-2002

**Wiring diagrams**

Clip-on timers

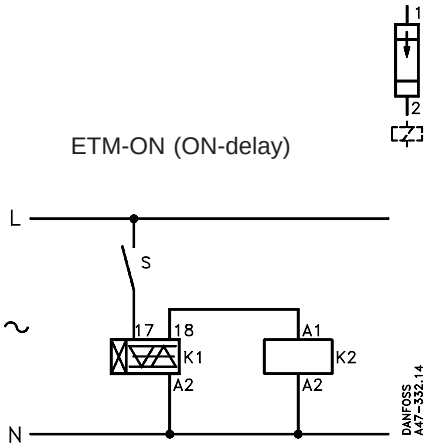


ETM-ON (ON-delay)

ETB (ON-delay a.c.)

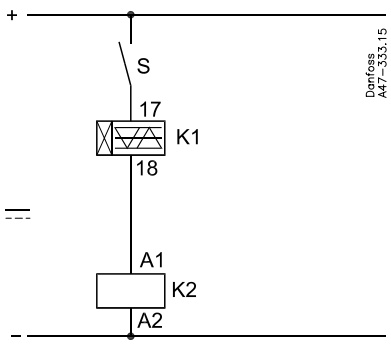


ETB (ON-delay d. c.)

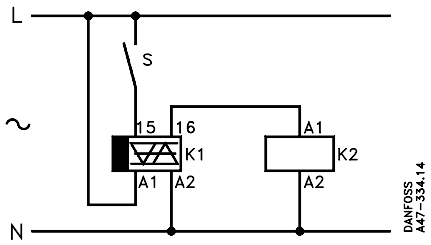


ETB (OFF-delay a. c.)


® Danfoss A/S 08-2002

**Wiring diagrams**

Timers

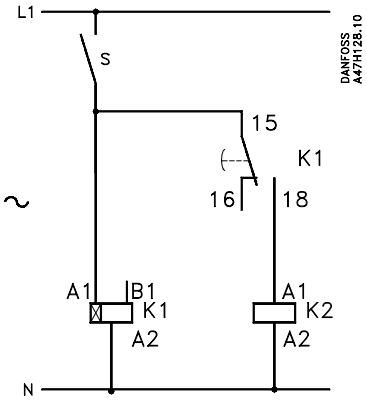


ATI (ON-delay)

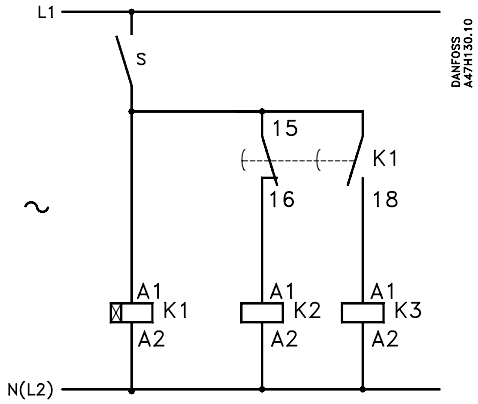


SDT (Star-delta function)

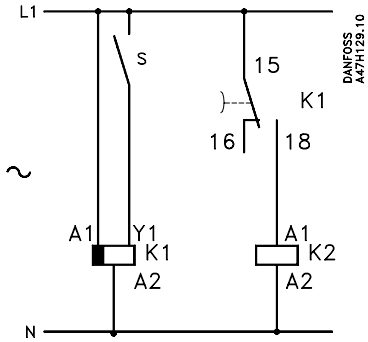


BTI (OFF-delay)

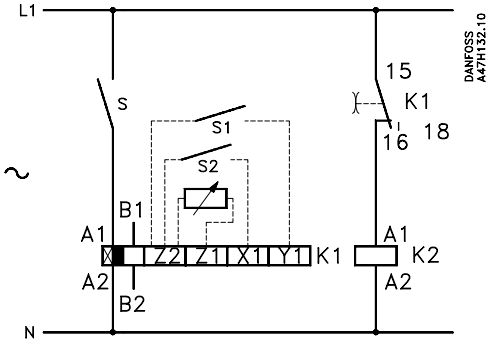


MTI (with one output relay)

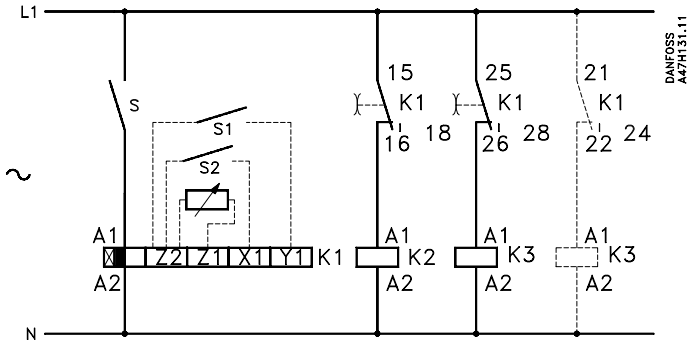


MTI (with two ouput relays)


® Danfoss A/S 08-2002

## Målskitser

### Motor starters CIM 9 - 25

Motor starter CIM 9 - 25

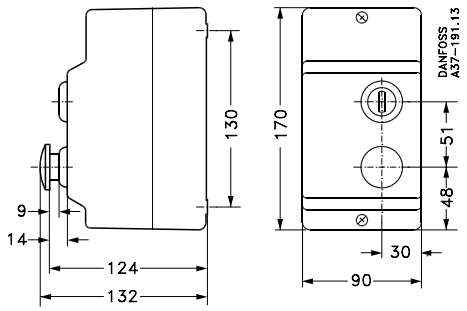


### Star-delta starters SDU

Star-delta starters SDU 12, 16, 25

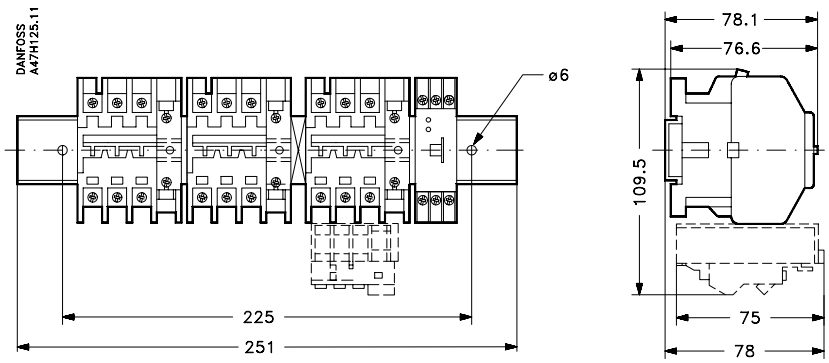



® Danfoss A/S 08-2002

## Dimensions

### Enclosures

Plastic enclosure F1 for star-delta SDU 12, 16, 25

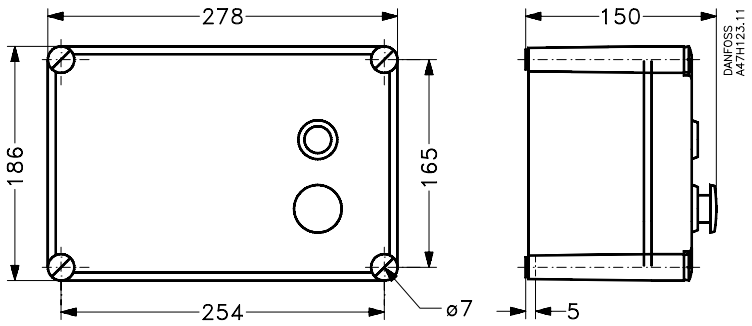


Plastic enclosure F2 and F3 for star-delta SDU 12, 16, 25

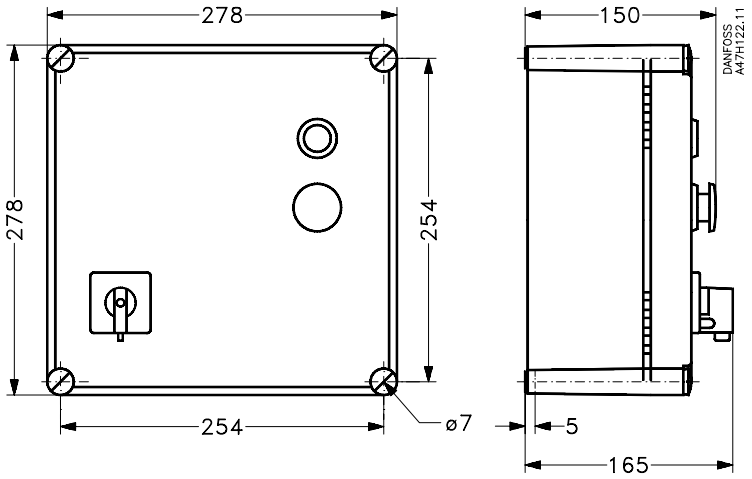


### Star-delta starters SDI

Star-delta starters on DIN rail, SDI 32, 45

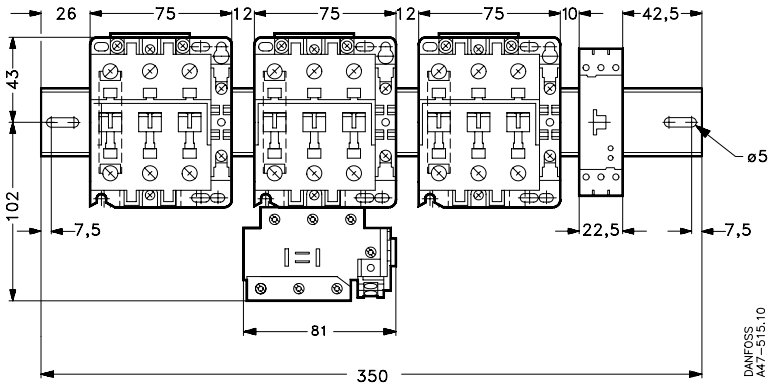



® Danfoss A/S 08-2002

## Dimensions

*Enclosure*

Plastic enclosure type 2 (IP 65)
for CIMI 9-25 and CIMR 9-25

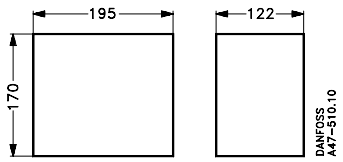


Plastic enclosure type 3 (IP 65)
for CIMRI 9-25

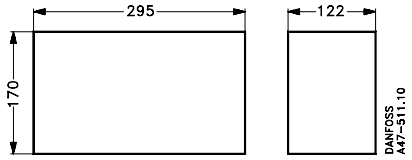


Plastic enclosure type 4 (IP 55)
for SDIMI 12-25

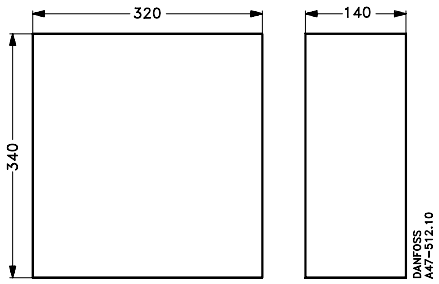


Steel enclosure type 5 (IP 55)
for SDIMI 32-60

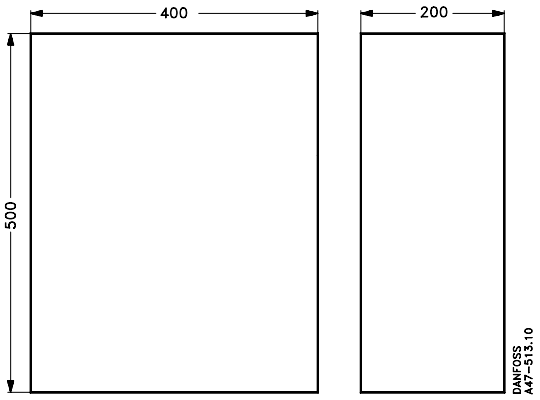


Steel enclosure type 6 (IP 55)
for SDIMI 85-105

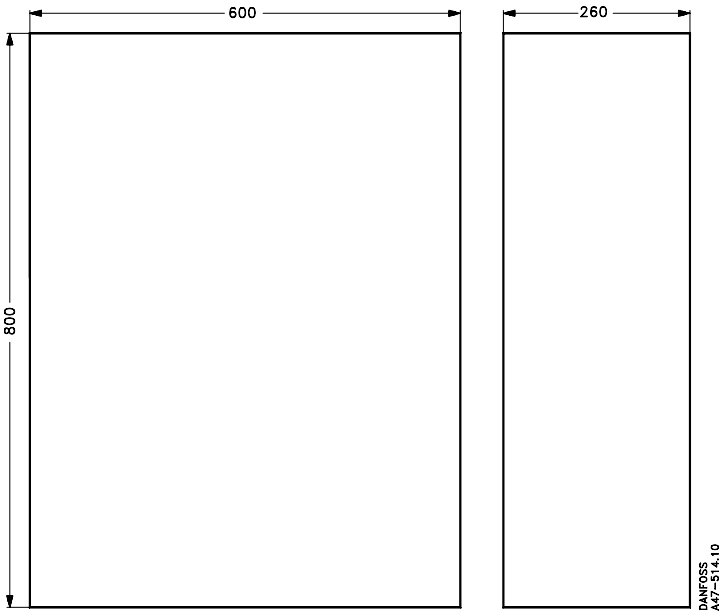


Danfoss can accept no responsibility for possible errors in catalogues, brochures and other printed material. Danfoss reserves the right to alter its products without notice. This also applies to products already on order provided that such alterations can be made without subsequential changes being necessary in specifications already agreed.
All trademarks in this material are property of the respective companies. Danfoss and the Danfoss logotype are trademarks of Danfoss A/S. All rights reserved.