Data sheet

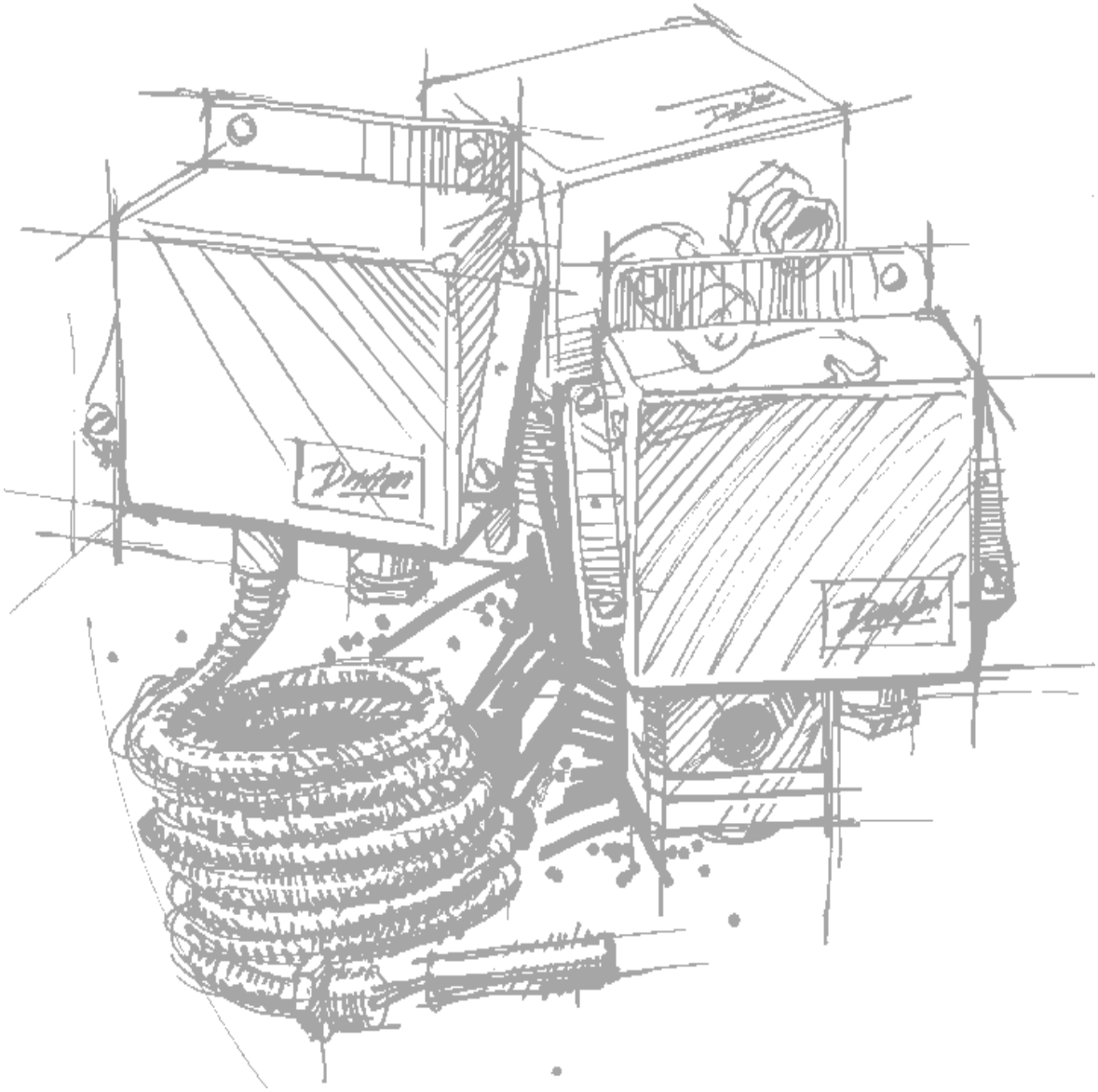

Pressure controls and thermostats type CAS

Pressure controls, type CAS

0 10 20 30 40 50 60 bar	Range p_e bar	Type	Further information page
Standard pressure controls			
	0-3.5	CAS 133	3
	0-10	CAS 136	
	6-18	CAS 137	
	10-35	CAS 139	
Pressure controls for high pressure and strongly pulsating media			
	1-10	CAS 143	3
	4-40	CAS 145	
	6-60	CAS 147	
Differential pressure Δp 0.2-2.5 bar			
	0.2-2.5	CAS 155	3

Thermostats, type CAS

0 30 60 90 120 150 C°	Range C°	Type	Further information page
	20-80	CAS 178	8
	70-120	CAS 180	
	60-150	CAS 181	

ISO 9001 quality approval

ISO 9001

iso.cdr
H:\billeder\cdrfiler

Danfoss A/S is certified by BSI in accordance with international standard ISO 9001. This means that Danfoss fulfils the international standard in respect of product development, design, production and sale. BSI exercises continuous inspection to ensure that Danfoss observes the requirements of the standard and that Danfoss' own quality assurance system is maintained at the required level.

Introduction

CAS units are pressure-controlled switches. The position of the contacts depends on the pressure in the inlet connection and the set value. In the series, special attention has been given to meeting demands for

- a high level of enclosure
- low differential
- robust and compact construction
- resistance to shock and vibration.

The CAS series covers most outdoor as well as indoor application requirements.
CAS pressure controls are suitable for use in alarm and regulation systems in factories, diesel plant, compressors, power stations and on board ship.

Technical data and ordering

When ordering, please state type and code number

CAS 133,136,137,139

CAS 143, 145, 147

CAS 155

Preferred versions

Setting range p_e (bar)	Mechanical differential (bar)	Permissible operating pressure (bar)	Max. test pressure (bar)	Min. burst pressure (bar)	Pressure connection	Code no.	Type
0 → 3.5	0.1	10	10	40	G ¼	**060-3150**	CAS 133
0 → 10	0.2	22	22	40	G ¼	**060-3151**	CAS 136
6 → 18	0.3	27	27	72	G ¼	**060-3152**	CAS 137
10 → 35	0.6	53	53	100	G ¼	**060-3153**	CAS 139

Pressure controls for high pressure and strongly pulsating media

Setting range p_e (bar)	Mechanical differential (bar)	Permissible operating pressure (bar)	Max. test pressure (bar)	Min. burst pressure (bar)	Pressure connection	**Code no.**	Type
0 → 10	0.2-0.6	120	180	240	G ¼	**060-3160**	CAS 143
4 → 40	0.8-2.4	120	180	240	G ¼	**060-3161**	CAS 145
6 → 60	1-3	120	180	240	G ¼	**060-3162**	CAS 147

Differential pressure control type CAS

Setting range p_e (bar)	Mechanical differential (bar)	Permissible operationg pressure for low pressure (bar)	Max. test pressure (bar)	Min. burst pressure (bar)	Pressure connection	**Best.nr.**	Type
0.2-2.5	0.1	0-8	22	42	2 x G ¼	**060-3130**	CAS 155

Terminology

Range setting
The pressure range within which the unit will give a signal (contact changeover).

Differential
The difference between make pressure and break pressure (see also page 7).

Permissible bursting pressure
The highest permanent or recurring pressure the unit can be loaded with.

Max. test pressure
The highest pressure the unit may be subjected to when, for example, testing the system for leakage. Therefore, this presure must not occur as a recurring system pressure.

Min. burst pressure
The pressure which the pressure-sensitive element will withstand without leaking.

Switch
Microswitch with single pole changeover (SPDT)

Contact load
Alternating current: 220 V, 0.1 A, AC-14 and AC-15 (inductive load)
Direct current: 125 V, 12 W DC-13 (inductive load)

Materials in contact with the medium

CAS 133, 136, 137, 139	Bellows:	Stainless steel, material no. 1.4306 (DIN 17440)
	Pressure connection:	Brass material no. 2.0401 (DIN 17660)
CAS 143, 145, 147, 155	Diaphragm connection:	Nickel plated brass CuZn 40 Pb3 ISO R 426 (DIN 1756)
	Diaphragm:	Nitrile-butadien rubber

Ambient temperature
CAS 133-139: –40 to +70°C
CAS 143-155: –25 to +70°C

Temperature of medium
CAS 133-139: –40 to + 100°C
CAS 143-155: –25 to + 100°C
For water and seawater, max. 80 °C

Vibration resistance
Vibration-stable in the range 2-30 Hz amplitude 1.1 mm and 30-100 Hz, 4 G.

Enclosure
IP 67 acc. to IEC 529 and DIN 40050.
The pressure control housing is enamelled pressure die cast aluminium (GD-AISi 12).
The cover is fastened by four screws which are anchored to prevent loss.
The enclosure can be sealed with fuse wire.

Cable entry
Pg 13.5 for cable diametrers from 5 to 14 mm.

Identification
The type designation and code no. of the unit is stamped in the side of the housing.

Dimensions and weight

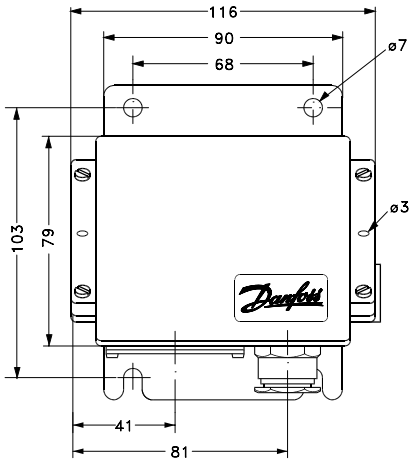

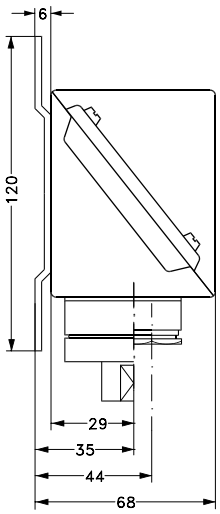

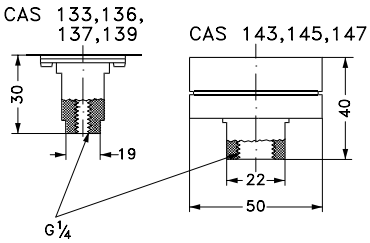

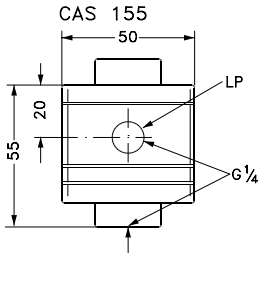

Weight:
CAS 133-139 approx. 1.0 kg
CAS 143-147 approx. 1.3 kg
CAS 155 approx. 1.5 kg

Approvals CE - marked acc. to EN 60947-5-1

Ship approvals

American Bureau of Shipping, USA (excl. CAS 139)
Bureau Veritas, France
Det Norske Veritas, Norway
GL Germanischer Lloyd, Germany
Lloyd Register of Shipping, UK
Nippon Kaiji Kyokai, Japan
PR Polski Rejestr Statków, Poland
Registro Italiano Navale, Italy
RMRS, Russian Maritime Register of Shipping

Note: In addition we refer to the certificates, the copies of which can be ordered from Danfoss.
GL approval is conditional on the use of a ship's cable entry.

Accessories

Part		Description	Qty.	Code no.
Connector with nipple	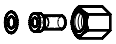	Pipe thread ISO 228/1, G $^{3}/_{8}$ connector, nipple and AL washer (10 mm ext. 8 mm int. diam) for solering onto steel or copper tubing, steel span of jaws 22	5	**017-4368**
Connector with nipple	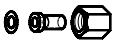	G $^{3}/_{8}$ connector, nipple and washer (10 mm ext./ 6.5 mm int. diam.) for welding, steel span of jaws 22	1	**017-4229**
Reducer		Pipe thread ISO 228/1, G $^{3}/_{8}$ x $^{7}/_{16}$ - 20 UNF reducer, washer, brass span of jaws 22	5	**017-4205**
Adaptor		Pipe thread ISO 228/1, G $^{3}/_{8}$ x $^{1}/_{8}$ - 27 NPT with copper washer brass span of jaws 22	1	**060-3334**
Adaptor		Pipe thread ISO 228/1, G $^{3}/_{8}$ A x $^{1}/_{4}$ - 18 NPT with copper washer brass span of jaws 22	1	**060-3335**
Adaptor		Pipe thread ISO 228/1, G $^{3}/_{8}$ x $^{1}/_{4}$ - 18 NPT with copper washer brass span of jaws 22	1	**060-3336**
Adaptor		$^{7}/_{16}$ - 20UNF x R $^{3}/_{8}$ (ISO 7/1) brass, span of jaws 19	1	**060-3240**
Nipple		G $^{1}/_{4}$ A x G $^{3}/_{8}$ A		**060-3332**
		G $^{1}/_{4}$ A x ext. M10 x 1 with washer		**060-3338**
Damping coil	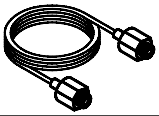	Pipe thread ISO 228/1, damping coil with G $^{3}/_{8}$ connector and 1.5 m copper capillary tube. Standard washers are supplied	1	**060-1047**
Armoured damping coil	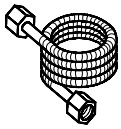	Pipe thread ISO 228/1, damping coil with G $^{3}/_{8}$ connector and 1 m copper capillary tube. Standard washers are suppled	1	**060-3333**

Installation

Installation
CAS pressure controls are fitted with a 3 mm steel mounting plate. The units should not be allowed to hang from the pressure connection.

Pressure connection
When fitting or removing pressure lines, the spanner flats on the pressure connection should be used to apply counter-torque.

Steam plant
To protect the pressure element from excessive heat, the insertion of a water-filled loop is recommended. The loop can, for example, be made of 10 mm copper tube as shown in fig. 1.

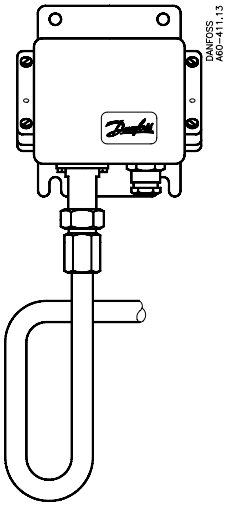

Fig. 1

Water systems
Water in the pressure element is not harmful, but in case of frost a water-filled pressure element may burst. To prevent this happening, the pressure control can be allowed to operate on an air cushion.

Media resistance
Se table of materials in contact with the medium, page 4. If seawater is involved, types CAS 143, 145, 147 are recommended.

Pulsationer
If the pressure medium is superimposed with severe pulsations, which occur in automatic sprinkler systems (fire protection), fuel systems for diesel motors (priming lines), and hydraulic systems (e.g. propeller systems), etc, types case 143, 145, 147 are recommended. The maximum permissible pulsation level for these types is 120 bar.

Setting
When the pressure control cover is removed, and the locking screw (3) is lossened, the range can be set with the spindle (1) while at the same time the scale (2) is being read.

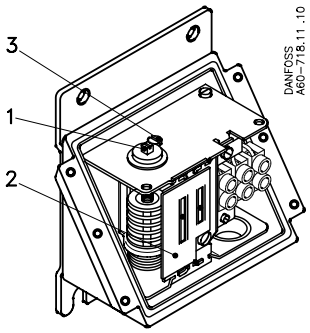

1 Range spindle
2 Range scale
3 Locking screw

Fig. 2

Electrical connection
CAS pressure controls are fitted with a PG 13.5 screwed cable entry that is suitable for cable diameters from 5 to 13 mm.
GL approval is however conditional on the use of a special ship's cable entry. Contact function is shown in fig. 3.

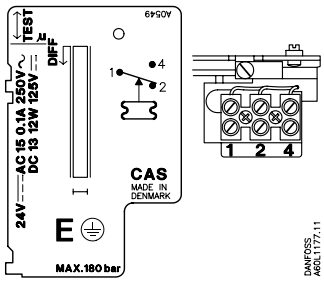

Fig. 3

Function

a. CAS 155
Contacts 1-4 make and contacts 1-2 break when the differential pressure rises above the set range value. The contacts changeover to their initial position when the differential pressure again falls to the range value minus the differential (see fig. 4).

I. Alarm for rising differential pressure given at the set range value.
II. Alarm for falling differential pressure given at the set range value minus the differential.

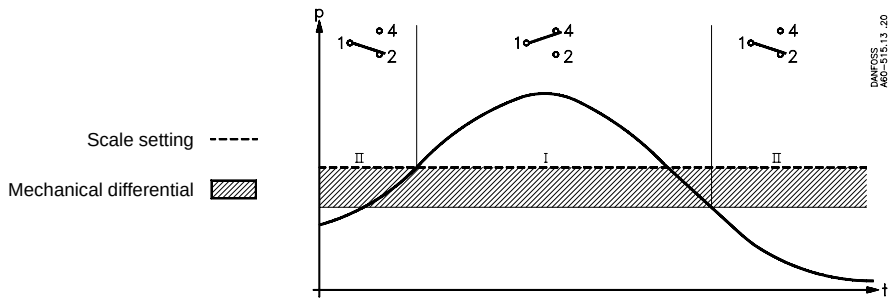

Fig. 4

b. All other CAS pressure controls
Contacts 1-2 make and contacts 1-4 break when the pressure falls under the set range value. The contacts changeover to their initial position when the pressure again rises to the set range value plus the differential (see fig. 5).

I. Alarm for falling pressure given at the set range value.
II. Alarm for rising pressure given at the set range value plus the differential.

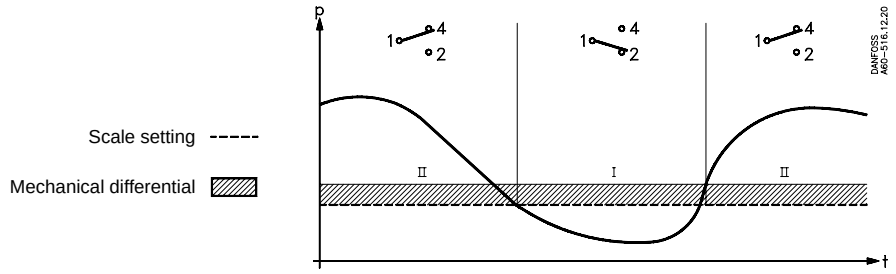

Fig. 5

Example 1:
An alarm must be given when the lubrication oil pressure in a motor falls below 0.8 bar. Select CAS 133 (range 0 to 3.5 bar).
The minimum permissible lubricating oils pressure of 0.8 bar must be set using the range spindle. The differential is fixed at 0.1 bar, i.e. the alarm will not cut out before the pressure rises to 0.9 bar.
The switch break function is normally used for alarm purposes, i.e. the alarm must be connected to terminals 1 and 4.

Example 2:
When the differential pressure exceeds 1.3 bar a filter must be cleaned.
The maximum static pressure (LP) for the CAS 155 of 8 bar must not be exceeded.
The pressure control range spindle must be set at 1.3 bar.
The alarm must be connected to terminals 1 and 2 (alarm for broken circuit).

Introduction

CAS thermostats are temperature-controlled switches. The position of the contacts depends on the temperature of the sensor and the set scale value. In this series, special attention has been given to meeting demands for a high level of enclosure, robust and compact construction, and resistance to shock and vibration.

The CAS series covers most outdoor as well as indoor application requirements.
CAS thermostats are suitable for use in monitoring and alarm systems in factories, diesel plant, compressors, power stations and on board ship.

Technical data and ordering

CAS with remote sensor, armoured capillary tube

Preferred versions

When ordering, please state type and code number

Setting range °C	Mechanical differential adjustable/ fixed °C	Max. sensor temperature °C	Suitable sensor length (see also "Accessories") mm				Capillary tube length m	**Code no.**	Type
20 → 80	2.0	130	65	75	110	160	2	**060L3151**	CAS 178
70 → 120	2.0	220	65	75	110	160	2	**060L3153**	CAS 180
60 → 150	2.0	250	65	75	110	160	2	**060L3155**	CAS 181

Switch
Mikroswitch with single pole changeover (SPDT)

Contact load
Alternating current:
220 V, ~0,1 A, AC-14 and AC-15 (inductive load)

Direct current
125 V, 12W DC-13 (inductive load)

Ambient temperature
CAS 178,180 and 181: –25 → +70°C

Vibration resistance
Vibration-stable in the range 2-30 Hz, amplitude 1,1 mm and 30-100 Hz, 4 G.

Enclosure
IP 67 acc. to IEC 529 and DIN 40050.
The thermostat housing is enamelled pressure die cast aluminium (GD-AISI 12). The cover is fastened by four screws which are anchored to prevent loss.
The enclosure can be sealed with fuse wire.

Cable entry
Pg 13.5 for cable diameters from 5 to 14 mm.

Identification
The type designation and code no. of the unit is stamped in the side of the housing.

Approvals

CE marked acc. to EN 60947-5-1

Ship approvals

American Bureau of Shipping, USA
Bureau Veritas, Frankrig
Det Norske Veritas, Norway
GL Germanischer Lloyd, Germany
Lloyd Register of Shipping, UK
Nippon Kaiji Kyokai, Japan
PR Polski Rejestr Statków, Poland
Registro Italiano Navale, Italy
RMRS, Russian Maritime Register of Shipping

Note: In addition we refer to the certificates, the copies of which can be ordered from Danfoss.
GL approval is conditional on the use of a ship's cable entry.

Accesories: Sensor pockets for thermostats	Sensor pocket	A mm	Thread B	**Code no.**	Sensor pocket	A mm	Thread B	**Code no.**
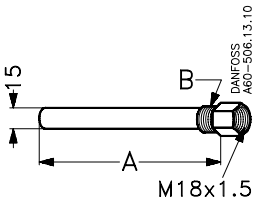	Brass	65	1/2 NPT	**060L3265**				
	Brass	75 75 75 75 75	1/2 NPT G 1/2 A G 3/4 A G 1/2 A (ISO 228/1) G 3/4 A (ISO 228/1)	**060L3264** **060L3262** **060L3266** **060L3281** **060L3404**	Steel 18/8	75	G 1/2 A	**060L3267**
	Brass	110 110 110 110	1/2 NPT G 1/2 A G 1/2 A (ISO 228/1) G 3/4 A (ISO 228/1)	**060L3280** **060L3271** **060L3406** **060L3403**	Steel 18/8	110 110	G 1/2 A 1/2 NPT	**060L3268** **060L3270**
	Brass	160 160 160	G 1/2 A G 1/2 A (ISO 228/1) G 3/4 A (ISO 228/1)	**060L3263** **060L3407** **060L3405**	Steel 18/8	160	G 1/2 A	**060L3269**
	Brass	200 200 200	G 1/2 A G 1/2 A (ISO 228/1) G 3/4 A (ISO 228/1)	**060L3206** **060L3408** **060L3402**	Steel 18/8	200 200	G 1/2 A G 3/4 A	**060L3237** **060L3238**
Note: all sensor pockets are supplied without gland nut, gaskets and washers.	Brass	250	G 1/2 A	**060L3254**				
	Brass	330	G 1/2 A	**060L3255**				
	Brass	400	G 1/2 A	**060L3256**				
	Brass	500	G 1/2 A	**060L3257**				

Other accessories		Description	Qty./unit	**Code no.**
Clamping band	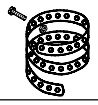	For CAS-termostats with remote sensor (L = 392 mm)	10	**017-4204**
Heat conductive compound (Tube with 4.5 cm³)		For CAS thermostats with sensor fitted in a sensor pocket. For filling sensor pocket to improve heat transfer between pocket and sensor. Application range for compound: –20 to +150 °C, momentarily up to 220 °C.	1	**41E0110**

Dimensions and weight

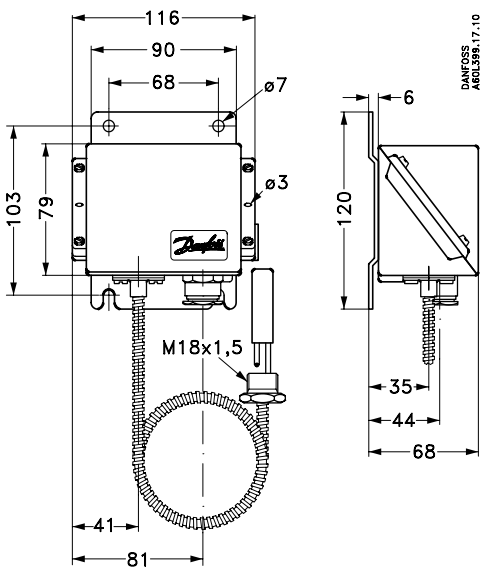

CAS with remote sensor and 2 m armoured capillary tube
Weight: approx. 1.4 kg

Installation

Location of unit: CAS thermostats are designed to withstand the shocks that occur, for example, in ships on compressors and in large machine installations. CAS thermostats are fitted with a base of 3 mm steel plate for fixing to bulkheads, etc.

Resistance to media
Material specifications for sensor pockets.

Sensor pocket brass
The tube is made of Ms 72 to DIN 17660, the threaded portion of So Ms 58 Pb to DIN 17661.

Sensor pocket, stainless steel 18/8
Material designation 1.4305 to DIN 17440.

Sensor position
As far as possible the sensor should be positioned so that its longitudinal axis is at right angles to the direction flow. The active part of the sensor is ∅13 mm x 47.5 mm.

The medium
The fastest reaction is obtained from a medium having high specific heat and high thermal conductivity. It is therefore advantageous to use a medium that fulfils these conditions (provided there is a choice). The flow velocity of the medium is also of significance. (The optimum flow velocity for liquids is about 0.3 m/s).
For permissible media pressure see fig. 1.

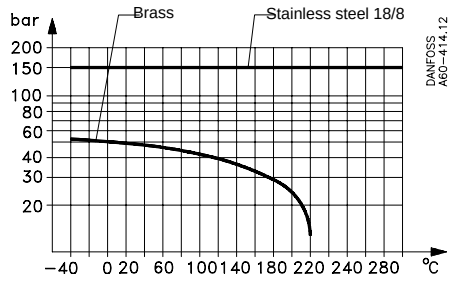

Fig. 1
Permissible media pressure on the sensor pocket as a function of temperature

Setting
When the thermostat cover is removed, and the locking screw (3) fig. 2 is loosened, the range can be set with the spindle (1) while at the same time the scale (2) is being read.

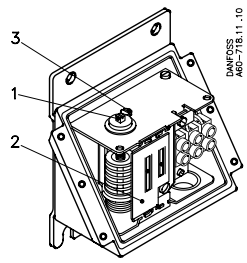

1. Range spindle
2. Range scale
3. Locking screw

Fig. 2

Scale correction
The sensor on CAS thermostats contains an adsorption charge. Therefore function is not affected whether the sensor is placed warmer or colder than the remaining part of the thermostatic element (bellows and capillary tube). However, such a charge is to some extent sensitive to changes in the temperature of bellows and capillary tube. Under normal conditions this is of no importance, but if the htermostat is to be used in extreme ambient temperatures there will be a scale deviation. The deviation can be compensated for as follows:
Scale correction = Z x a
Z can be found from fig. 3, while a is the correction factor from the table below.
(See example, page 11).

Type	Regulation range °C	Correction factor a for thermostats
CAS 178	20 → 80	2.5
CAS 180	70 → 120	2.4
CAS 181	60 → 150	3.7

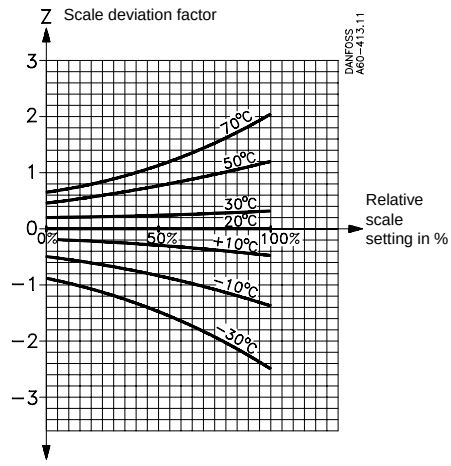

Fig. 3

Electrical connection
CAS thermostats are fitted with a Pg 13.5 screwed cable entry suitable for cables from 5 to 14 mm.
GL approval is conditional on the use of a ship's cable entry.
Contact function, see fig. 4.

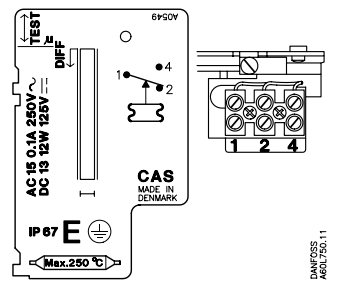

Fig. 4

Function

Differentials
The mechanical differential is the differential determined by the design of the thermostat.
The thermal differential (operating differential) is the differential the system operates on.
The thermal differential is always greater than the mechanical differential and depends on three factors:
1) Medium flow velocity
2) Temperature change rate of the medium and
3) Heat transmission to the sensor

Thermostat function
Contacts 1-4 make while contacts 1-2 break when the temperature rises above the scale setting.

The contacts changeover to their initial position when the temperature falls to the scale setting minus the differential. See fig. 5.

I. Alarm for rising temperature given at range setting value.
II. Alarm for falling temperature given at range setting value minus the differential

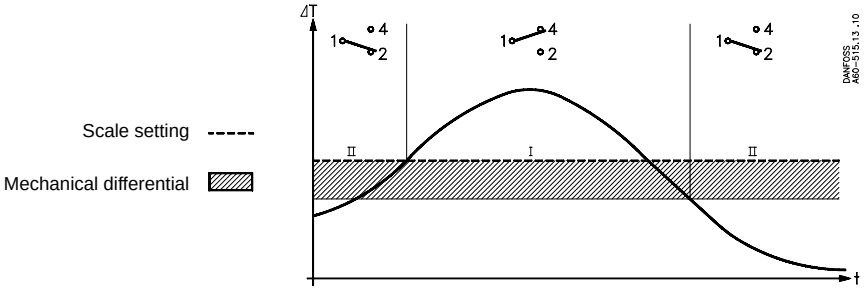

Fig. 5

Examples

Example 1
Diesel engine with cooling water temperature of 85°C (normal). An alarm must be triggered if the cooling water temperature exceeds 95°C. Choose a CAS thermostat 180 (range +70 to 120°C).
Main spindle setting: 95°C.
The required alarm function is obtained by connecting to thermostat terminals 1-4.

Example 2
Find the necessary scale correction for a CAS 180. Set +95°C at +50°C ambient temperature.

The relative scale setting Z can be calculated from the following formula:

$$\frac{\text{Setting value - min. scale value}}{\text{max. scale value - min. scale value}} \times 100 = \%$$

Relative scale setting: $\frac{95 - 70}{120 - 70} \times 100 = 50\%$

Factor for scale deviation Z fig. 3, Z ≃ 0.7
Correction factor a, see table page 10, fig. 3 = 2.4.
Scale correction = Z × a = 0.7 × 2.4 = 1.7°C
CAS must be set at 95 + 1.7 = 96.7°C

Conversion table

	Pascal (= Newton per. square metre) (N/m^2) Pa	Newton per square mm N/mm^2	bar	Kilopond per squre metre (mm H_20) kp/m^2	Meter water gauge m H_20	Technical atmosphere (kp/cm^2) at	Physical atmosphere atm	Torr (0°C) mm Hg	Inches Hg (0°C) in Hg	Poundforce per Square inch (lbf/in^2) psi
1 Pa	1	10^{-6}	10^{-5}	0.1020	$1.020 \cdot 10^{-4}$	$1.020 \cdot 10^{-5}$	$9.869 \cdot 10^{-5}$	$7{,}500 \cdot 10^{-3}$	$2{,}953 \cdot 10^{-4}$	$1.450 \cdot 10^{-4}$
1 N/mm^2	10^6	1	10	$1.020 \cdot 10^5$	102.0	10.20	9.869	$7{,}5 \cdot 10^3$	295,3	145.0
1 bar	10^5	0,1	1	$10.197 \cdot 10^3$	10.20	1.020	0.9869	750	29,53	14.50
1 kp/m^2	9.80665	$9.807 \cdot 10^{-6}$	$9.807 \cdot 10^{-5}$	1	10^{-3}	10^{-4}	$0.9678 \cdot 10^{-4}$	0,07355	$2{,}896 \cdot 10^{-3}$	$1.422 \cdot 10^{-3}$
1 m H_20	9806.7	$9.807 \cdot 10^3$	0.09807	1000	1	0,1	0.09678	73,55	2,896	1.422
1 at	$98.066 \cdot 10^3$	0.09807	0.9807	10^4	10	1	0.9678	735,5	28,96	14.22
1 atm	$101.325 \cdot 10^3$	0.1013	1.013	$10.333 \cdot 10^3$	10.33	1.033	1	760	29,92	14.70
1 mm Hg	133.32	$1.333 \cdot 10^{-4}$	$1.333 \cdot 10^{-3}$	13.60	0.01360	$1.360 \cdot 10^{-3}$	$1.316 \cdot 10^{-3}$	1	0,03937	$1.934 \cdot 10^{-2}$
1 in Hg	3387	$3.387 \cdot 10^{-3}$	0.03387	345.3	0.3453	0.03453	0.03342	25,4	1	0.4912
1 psi	6895	$6.895 \cdot 10^{-3}$	0.06895	703.1	0.7031	0.07031	0.06804	51,71	2,036	1

DK-6430 Nordborg
Denmark

